Cairo University | **Electronics & Comm. Dept.**
Faculty of Engineering | **Fourth Year 2010/11**

Computer Networks
November 2011

Answer ALL Questions **Time Allowed : 1 1/2 Hours**

Question #1

A source is connected to a destination through two intermediate nodes – as shown in the figure below:

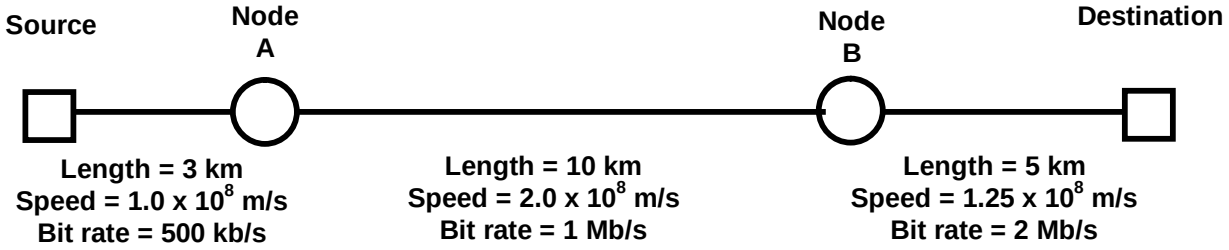

3 scenarios are considered for Nodes A and B:

Scenario 1 : Both nodes use circuit –switched mode of operation
where Setup Message length = Disconnect Message length = 16 Bytes

Scenario 2 : Both nodes use packet –switched mode of operation
where Header length = 20 Bytes
Packet length (including header) = 520 Bytes

Scenario 3 : Both nodes use message –switched mode of operation
where Header length = 20 Bytes

a) For each of the three scenarios:
i) Draw the time sequence diagram showing the propagation of information from the source to the destination as a function of time. On such diagram indicate the propagation delay and the transmission delay. Assume the processing delay in each node is negligible.
ii) Compute the total delivery time needed to transmit a message of size 1 kByte.

b) Deduce which of the three scenarios has the smallest delivery time, and which has the longest delivery time.

c) Determine the message size for which circuit-switching and packet-switching have equal delivery time.

d) Determine the message size for which circuit-switching and message-switching have equal delivery time.

Question #2

Consider a box with 4 input ports and 4 output ports as shown below:

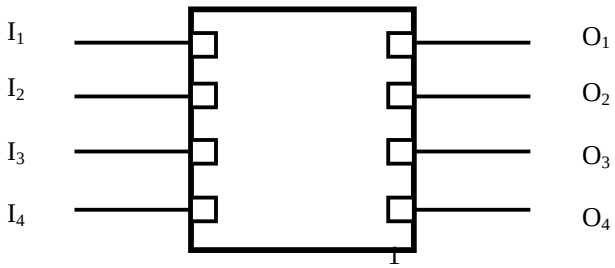

a) For the following 4 devices:

Hub - Ethernet Switch - Router - ATM Switch

Draw the internal architecture of the box. In your drawing, make sure to identify the name of all components (hardware & software), that are required in order for each box to fulfill its functions.

b) If a packet/cell enters the box at port I_1 and leaves at port O_3. Explain – using suitable diagrams – the processing performed by each of the following:

Hub - Ethernet Switch - Router - ATM Switch

on the incoming packet/cell. Also, draw the frame format of the packet/cell at both port I_1 and port O_3, showing all relevant fields.

c) If physical and logical addresses are to be assigned to the 4 ports, give an example for such assignment in the case of:

Hub - Ethernet Switch - Router - ATM Switch

<u>Question #3</u>

For the network shown below:

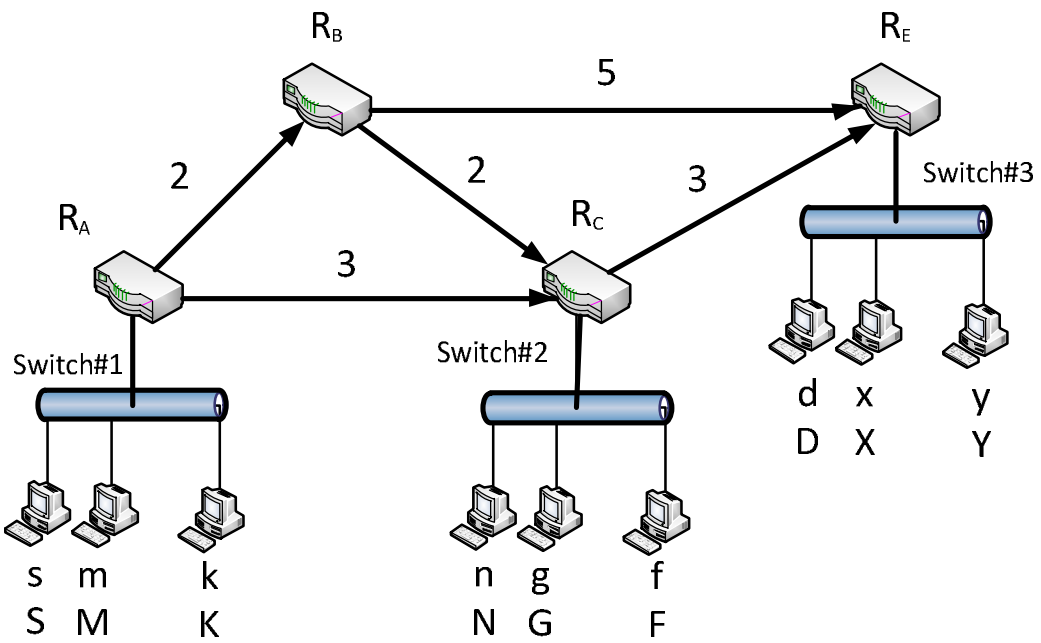

Explain – using appropriate time sequence diagrams – the procedure followed in order for Station (s,S) to send a message to Station (d,D). In your answer:

- **Assume that the entries of ALL switches are empty**
- **Assume that the entries of ALL routers are filled. (Give the values of such entries based on the given topology and distances).**
- **Show the content of each packet (including all addresses) as information travels from (s,S) to (d,D).**
- **Explain how physical addresses are obtained for the various packets**
- **Show the contents of the routing table of switches during the time that message is transferred from (s,S) to (d,D).**

With best of luck Prof. Dr. Mahmoud T. El-Hadidi