Lecture 2

Overview of Computer Networks (continued)

By

Mahmoud T. El-Hadidi

Professor of Computer Networks

Dept. of Electronics and Elec. Communications

Faculty of Engineering – Cairo University

INFORMATION FORMAT

- information refers to either
  data to be transferred
  or control messages needed to achieve their transfer

- electronic digital equipment use fixed number of binary digits (bits) to represent information. E.g.
  8 - bits 16 - bits 32 - bits

- typically, 8 - bits have been used to represent information such as
  characters
  numbers
  control characters *(for display, device control, communication)*

- examples of 8 - bit codes are
  EBCDIC *(Extended Binary Coded Decimal Interchange Code)*
  ASCII *(American Standard Code for Information Interchange)*

- other codes exist. E.g. 5 - bit Baudot code used for telex.

Code Sets: EBCDIC

Bits																			
			4	0	0	0	0	0	0	0	0	1	1	1	1	1	1	1	1
			3	0	0	0	0	1	1	1	1	0	0	0	0	1	1	1	1
			2	0	0	1	1	0	0	1	1	0	0	1	1	0	0	1	1
			1	0	1	0	1	0	1	0	1	0	1	0	1	0	1	0	1
8	7	6	5																
0	0	0	0	NUL	SOH	STX	ETX	PF	HT	LC	DEL			SMM	VT	FF	CR	SO	SI
0	0	0	1	DLE	DC_1	DC_2	DC_3	RES	NL	BS	IL	CAN	EM	CC		IFS	IGS	IRS	IUS
0	0	1	0	DS	SOS	FS		BYP	LF	EOB	PRE			SM			ENQ	ACK	BEL
0	0	1	1			SYN		PN	RS	UC	EOT					DC_4	NAK		SUB
0	1	0	0	SP										¢	.	<	(	+	
0	1	0	1	&										!	$	*	)	.	¬
0	1	1	0	—	/										.	%	-	>	?
0	1	1	1												#	@	.	=	"
1	0	0	0		a	b	c	d	e	f	g	h	i						
1	0	0	1		j	k	l	m	n	o	p	q	r						
1	0	1	0			s	t	u	v	w	x	y	z						
1	0	1	1																
1	1	0	0		A	B	C	D	E	F	G	H	I						
1	1	0	1		J	K	L	M	N	O	P	Q	R						
1	1	1	0			S	T	U	V	W	X	Y	Z						
1	1	1	1	0	1	2	3	4	5	6	7	8	9						

PF - Punch Off
HT - Horizontal Tab
LC - Lower Case
DEL - Delete
SP - Space
UC - Upper Case

RES - Restore
NL - New Line
BS - Backspace
IL - Idle
PN - Punch On
EOT - End of Transmission

BYP - Bypass
LF - Line Feed
EOB - End of Block
PRE - Prefix (ESC)
RS - Reader Stop
SM - Start Message
Others - Same as ASCII

American National Standard Code for Information Interchange

Bits				7	0	0	0	0	1	1	1	1
				6	0	0	1	1	0	0	1	1
4	3	2	1	5	0	1	0	1	0	1	0	1
0	0	0	0		NUL	DLE	SP	0	@	P	`	p
0	0	0	1		SOH	DC1	!	1	A	Q	a	q
0	0	1	0		STX	DC2	"	2	B	R	b	r
0	0	1	1		ETX	DC3	#	3	C	S	c	s
0	1	0	0		EOT	DC4	$	4	D	T	d	t
0	1	0	1		ENQ	NAK	%	5	E	U	e	u
0	1	1	0		ACK	SYN	&	6	F	V	f	v
0	1	1	1		BEL	ETB	'	7	G	W	g	w
1	0	0	0		BS	CAN	(	8	H	X	h	x
1	0	0	1		HT	EM	)	9	I	Y	i	y
1	0	1	0		LF	SUB	*	:	J	Z	j	z
1	0	1	1		VT	ESC	+	;	K	[	k	{
1	1	0	0		FF	FS	,	<	L	\	l	:
1	1	0	1		CR	GS	–	=	M	]	m	}
1	1	1	0		SO	RS	.	>	N	^	n	~
1	1	1	1		SI	US	/	?	O	—	o	DEL

Example:

Bits: P*7 6 5 4 3 2 1

1 1 0 0 0 0 0 1 = letter "A" (Odd Parity)
0 0 1 1 1 0 0 0 = number "8" (Odd Parity)

P* = Parity Bit

Morse Code

A	• –	N	– •	1	• – – – –
B	– • • •	O	– – –	2	• • – – –
C	– • – •	P	• – – •	3	• • • – –
D	– • •	Q	– – • –	4	• • • • –
E	•	R	• – •	5	• • • • •
F	• • – •	S	• • •	6	– • • • •
G	– – •	T	–	7	– – • • •
H	• • • •	U	• • –	8	– – – • •
I	• •	V	• • • –	9	– – – – •
J	• – – –	W	• – –	0	– – – – –
K	– • –	X	– • • –	.	• – • – • –
L	• – • •	Y	– • – –	,	– – • • – –
M	– –	Z	– – • •	?	• • – – • •

Baudot Code

Character Case Lower	Character Case Upper	Bit Pattern 5 4 3 2 1	Character Case Lower	Character Case Upper	Bit Pattern 5 4 3 2 1
A	–	0 0 0 1 1	Q	1	1 0 1 1 1
B	?	1 1 0 0 1	R	4	0 1 0 1 0
C	:	0 1 1 1 0	S	'	0 0 1 0 1
D	$	0 1 0 0 1	T	5	1 0 0 0 0
E	3	0 0 0 0 1	U	7	0 0 1 1 1
F	!	0 1 1 0 1	V	;	1 1 1 1 0
G	&	1 1 0 1 0	W	2	1 0 0 1 1
H	#	1 0 1 0 0	X	/	1 1 1 0 1
I	8	0 0 1 1 0	Y	6	1 0 1 0 1
J	Bell	^ 1 0 1 1	Z	"	1 0 0 0 1
K	(	0 1 1 1 1	Letters (Shift)↓		1 1 1 1 1
L	)	1 0 0 1 0	Figures (Shift)↑		1 1 0 1 1
M	.	1 1 1 0 0	Space (SP) =		0 0 1 0 0
N	,	0 1 1 0 0	Carriage Return <		0 1 0 0 0
O	9	1 1 0 0 0	Line Feed ≡		0 0 0 1 0
P	0	1 0 1 1 0	Blank		0 0 0 0 0

1 = Mark = Punch Hole
0 = Space = No Punch Hole

TRANSMISSION MODES

- bits used to represent information are transferred either

in parallel mode
(i.e over , say, 8 wires)
↓
reduces delay
feasible for short distances

in serial mode
(i.e. over 2 wires)
↓
reduces cost
appropriate for long distances

- for serial transfer of information bits, two transmission modes exist

asynchronous

used if source generates data at random times (e.g. keyboard)

requires marking start and end of each information unit

used for low rate data sources (< 19.2 kbps)

synchronous

used for transmitting large blocks of data - cannot waste bits for marking (e.g. computer to computer)

asynchronous transmission

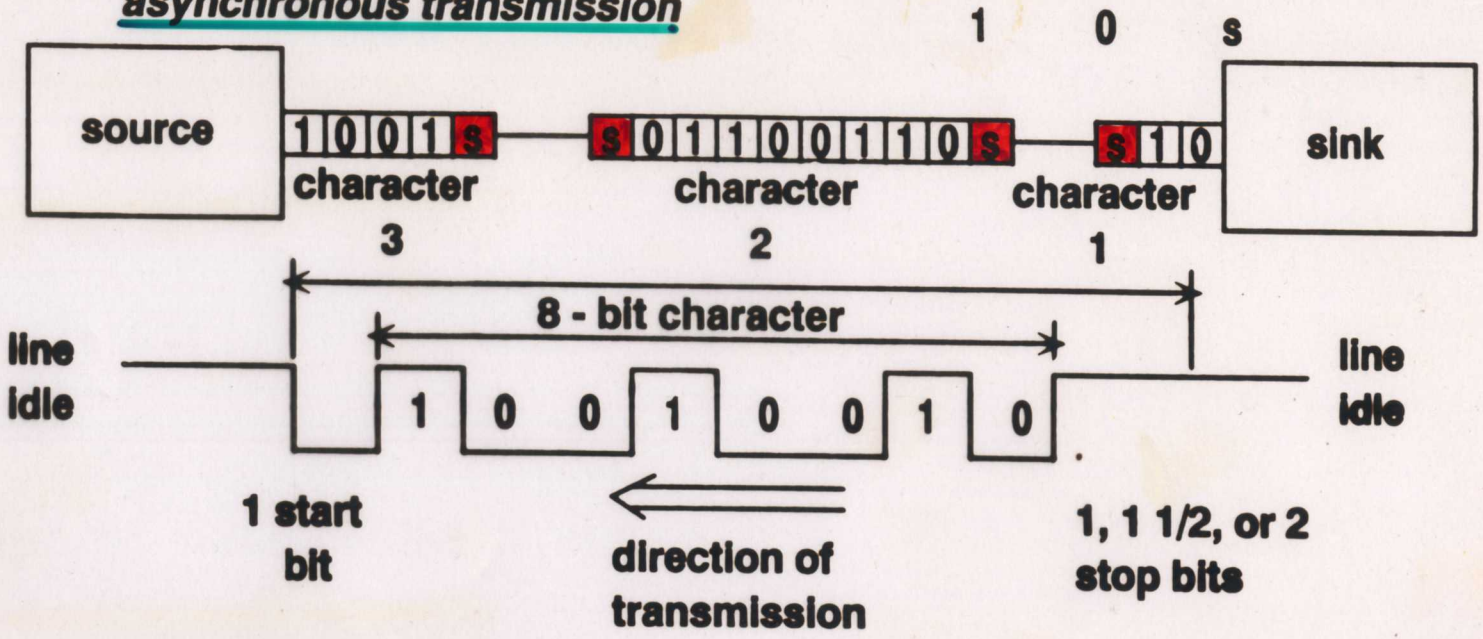

synchronous transmission

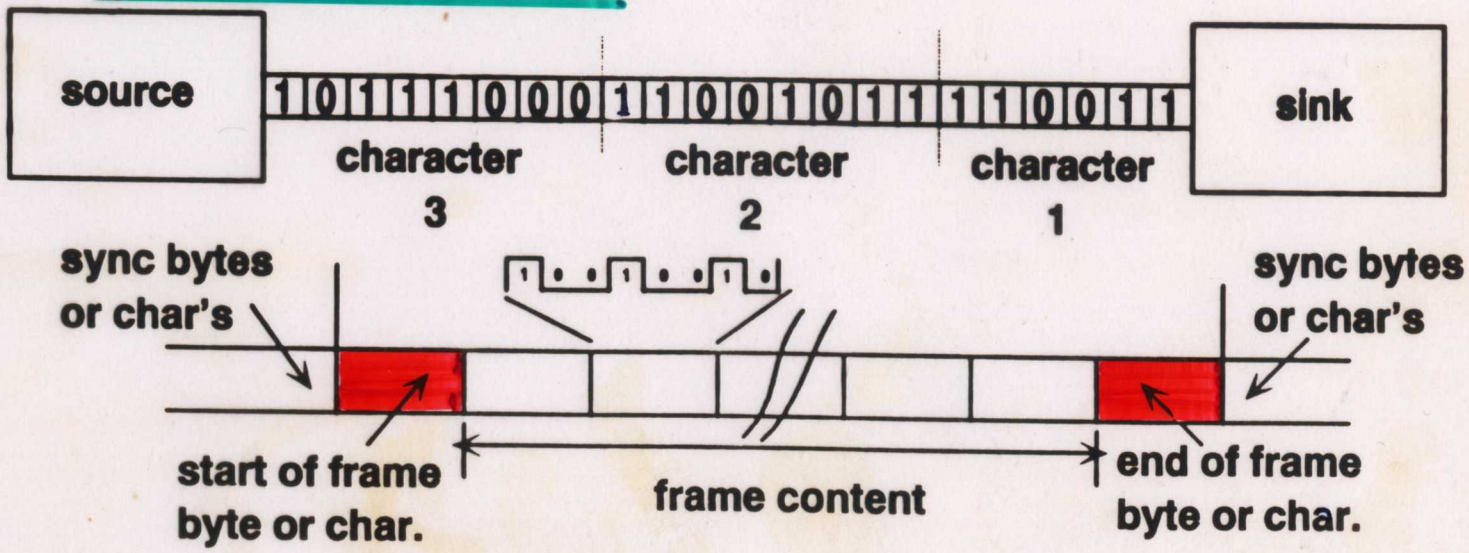

TRANSMISSION MEDIA

* **TWO - WIRE OPEN LINES**
  - several open wires are grouped together (multicore - flat ribbon cable)
  - typical distance bet. TX and RX < 50 m
  - typical data rates < 19.2 kbps

  (limitation is due to interference caused by capacitive, magnetic, or electromagnetic coupling - "crosstalk")

* **TWISTED - PAIR LINES**
  - obtained by twisting a two-wire line & twisting a wire pair inside a cable
  - typical distance bet. TX and RX < 100 m
  - typical data rates < 1 Mbps

  (limitation is due to skin effect and radiation losses)

* **COAXIAL CABLES**
  - obtained by using two concentric conductors (a core and outer conductor)
  - typical distances bet. TX and RX several 100's of meters
  - typical data rates 10 - 20 Mbps

  (limitation is due to electrical signal flow in a conductor wire)

* **OPTICAL FIRER**
  - obtained by using a glass or plastic core as a medium & electromagnetic wave as a signal
  - typical distances bet. TX and RX < 10 km for multimode
    < 100 km for single mode
  - typica data rates < 500 Mbps for multimode
    < 2 Gbps for single mode
  - requires optical source e.g. LED or LASER
    & optical receivers e.g. PIN or APD
  - expensive - not easy to install - not suitable for joining or splitting
  - immunity against electromagnetic interference & against tapping

* **MICROWAVES**
  - *satellite microwave* : microwave beam travels thr' free space between satellite and earth station
    (across continent - across country)
  - *terrestrial microwave* : microwave beam travels thr' atmosphere
    (line of sight + other constraints ==> distances < 50 km)

SIGNAL TRANSMISSION

* DEFINITIONS

- ***Data Rate*** ***(R) = # of bits per second produced by the data source***

- ***Channel Bandwidth*** ***(B) = range of frequencies (of a sinusoidal waveform) that can be passed by the channel, without attenuation***

- ***Channel Capacity*** ***(C) = max. bit rate that can be transmitted over a channel, so that all bits are correctly recovered at the receiver***

for a noise free channel : $C = 2B \log M$

(M = # of transmission levels = 2 for binary digits)

for a noisy channel : $C = B \log (1 + S/N)$

(S = signal level in watts, N = noise level in watts)

EXAMPLES

voice grade line has $B = 3400 - 300$
$= 3100$ Hz

for transmission using binary symbols, $M = 2$

line capacity (assuming no noise)

$$C = 2 \times 3100 \times \log 2$$
$$= 6400 \text{ bits/sec}$$

2

line capacity (maximum) for $S/N = 100$

$$C = 3100 \log (1 + 100)$$
$$= 20640 \text{ bits/sec}$$

TRANSMISSION IMPAIRMENTS

Sources of Impairments

attenuation = decrease of signal amplitude during propagation

↗ as distance ↗

limited bandwidth = disappearance of high frequency components (sharp edges) during propagation)

↗ as bit rate ↗

delay distortion = distortion (spreading) in the shape of received waveform

↗ as bit rate ↗

noise = energy appearing at receiver in the abscence of transmitted signal

its increase reduces C

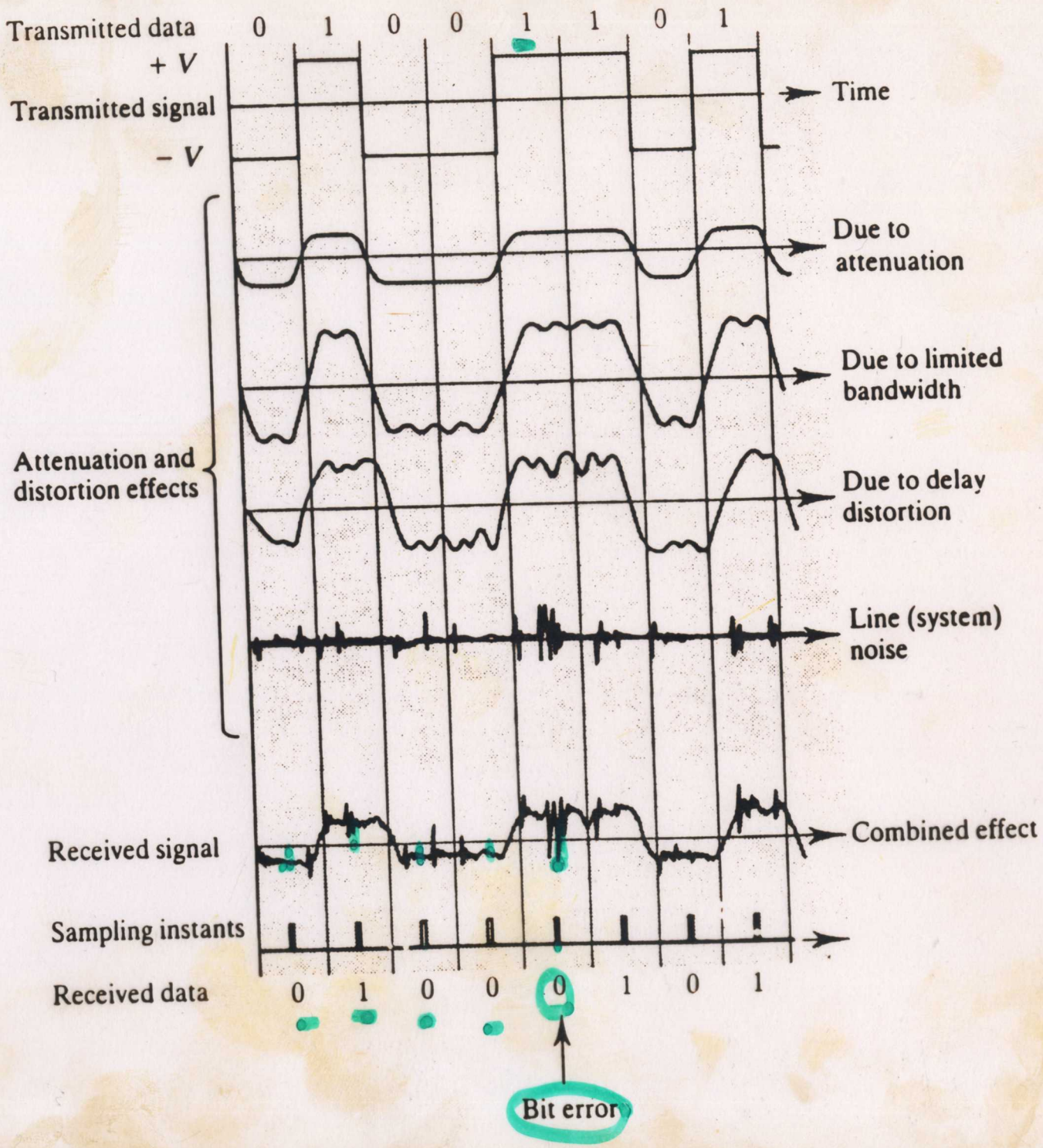
Transmitted data
0 1 0 0 1 1 0 1
+ V
Transmitted signal
− V
Time
Due to attenuation
Due to limited bandwidth
Attenuation and distortion effects
Due to delay distortion
Line (system) noise
Received signal
Combined effect
Sampling instants
Received data
0 1 0 0 0 1 0 1
Bit error

MODEMS

- are needed if bit streams are to be sent over Public Switched Telephone Networks

  designed for speech signals of bandwidth = 300 --> 3400 Hz

  ==> sequence of all 1's or all 0's cannot be transmitted (= dc level)

- waveforms in the range of 300 --> 3400 Hz are sent in place of 1's and 0's

  1's and 0's into waveforms → using modulator

  waveforms back into 1's and 0's → using demodulator

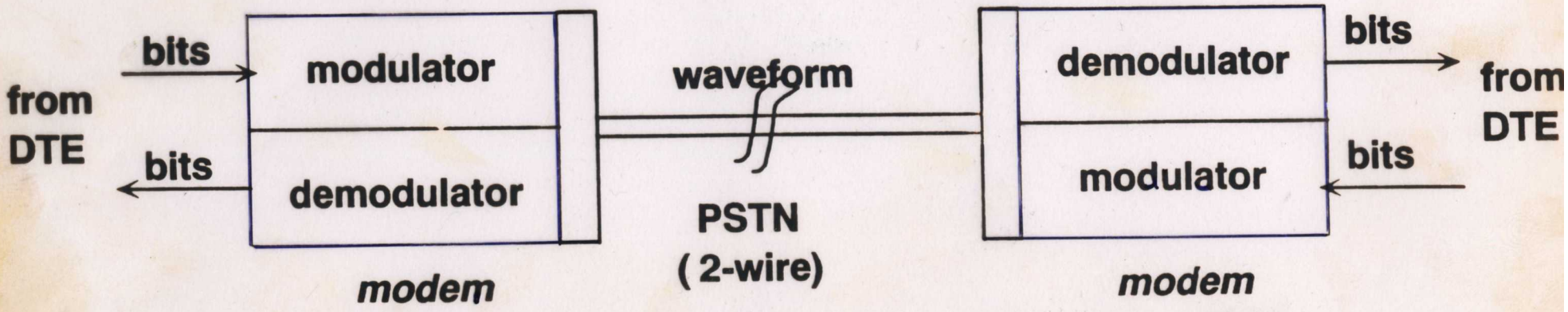

- waveform on a PSTN (2-wire) can carry bit information

  in its *amplitude* (Amplitude Modulation or Amplitude Shift Keying)
  in its *frequency* (Frequency Modulation or Frequency Shift Keying)
  in its *phase* (Phase Modulation or Phase Shift Keying)

- ASK not suitable for PSTN
  (amplitude depends on route selected in PSTN)

  FSK used with low bit rate modems : 300 - 1200 bits/sec
  (simple demodulator circuitry - low bandwidth requirements)

  PSK used with medium bit rate modems : 2400, 4800, 9600 bits/sec
  (improved probability of error)

REMARK

signalling rate = # of waveforms (after changing their amplitude, frequency, or phase) transmitted per second

Bit Rate = Signalling Rate x ~~2~~ $\log_2$ (# of different waveforms)

bits/sec baud

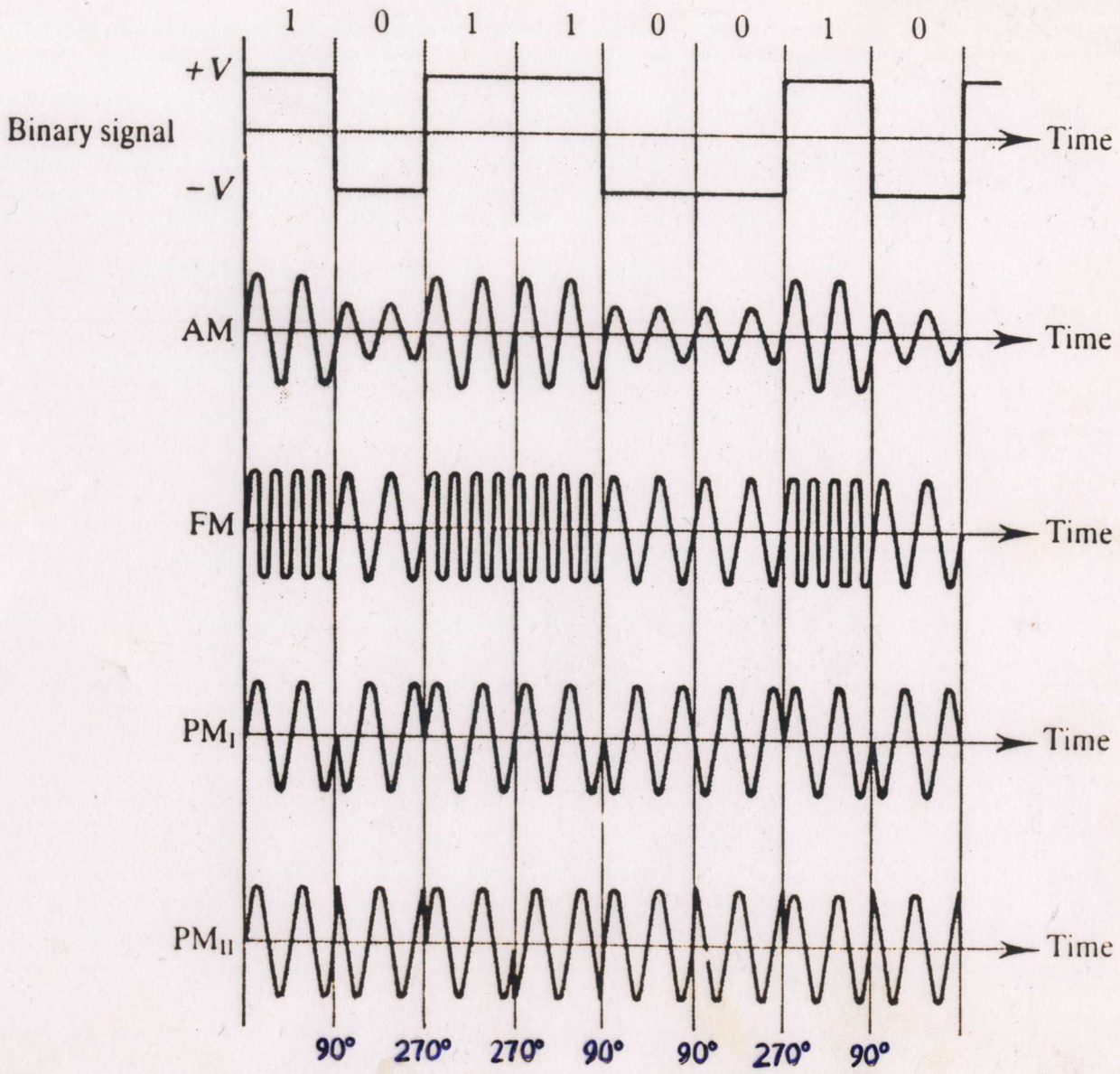
1 0 1 1 0 0 1 0
+V
Binary signal
−V
Time
AM
Time
FM
Time
PM$_I$
Time
PM$_{II}$
Time
90° 270° 270° 90° 90° 270° 90°

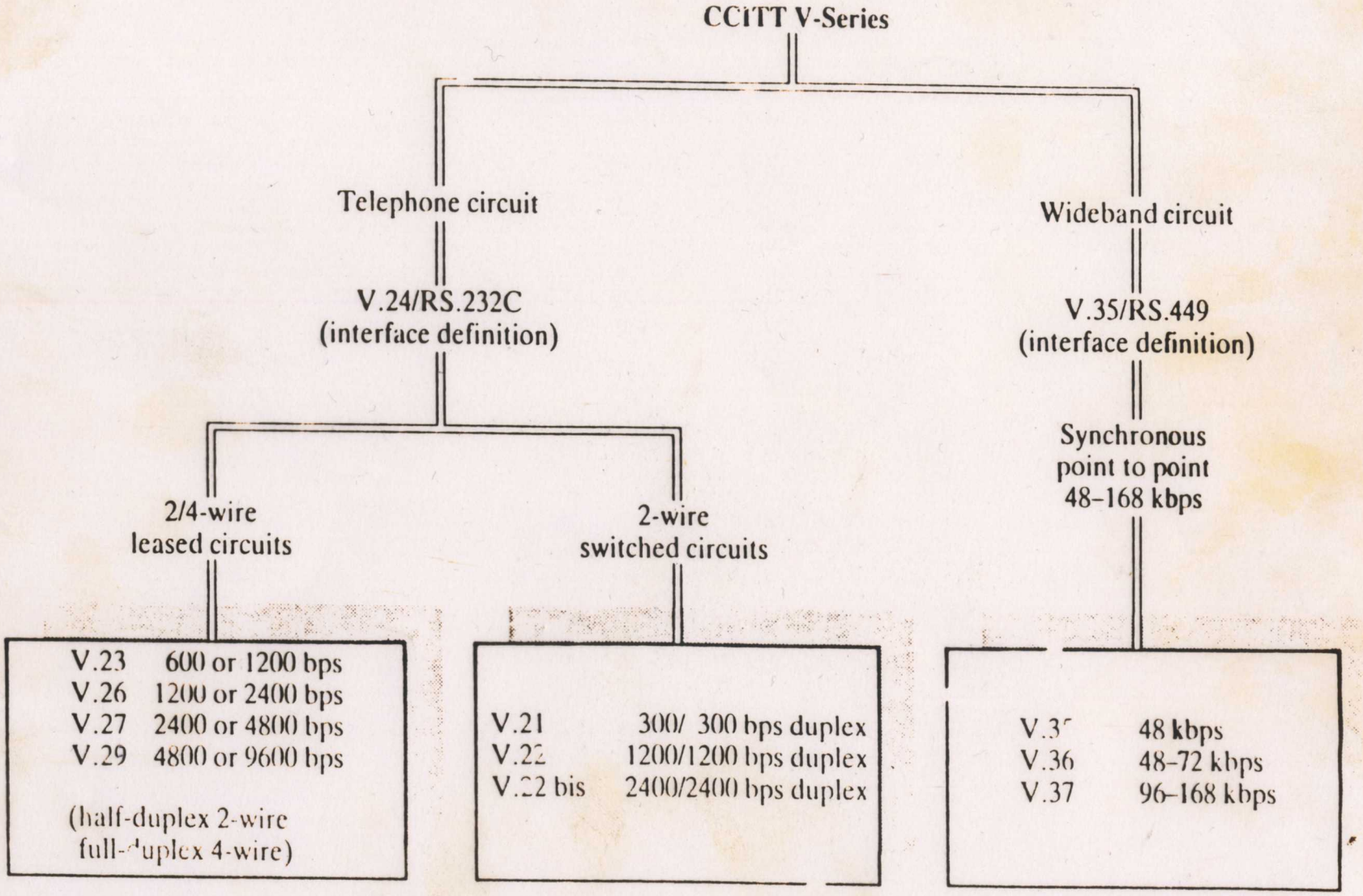
CCITT V-Series
Telephone circuit
Wideband circuit
V.24/RS.232C
(interface definition)
V.35/RS.449
(interface definition)
Synchronous
point to point
48–168 kbps
2/4-wire
leased circuits
2-wire
switched circuits
V.23 600 or 1200 bps
V.26 1200 or 2400 bps
V.27 2400 or 4800 bps
V.29 4800 or 9600 bps
(half-duplex 2-wire
full-duplex 4-wire)
V.21 300/ 300 bps duplex
V.22 1200/1200 bps duplex
V.22 bis 2400/2400 bps duplex
V.35 48 kbps
V.36 48–72 kbps
V.37 96–168 kbps