Lecture 1

Overview of Computer Networks

By

Mahmoud T. El-Hadidi

Professor of Computer Networks

Dept. of Electronics and Elec. Communications

Faculty of Engineering – Cairo University

A. TYPES OF COMPUTER NETWORKS

Several criteria :

* **according to location of processing power**

centralized **vs** ***distributed***

hierarchical **pier-to-pier**

* **according to network topology**

point-to-point **vs** ***broadcast***

star **mesh** **bus** **ring**

* **according to geographical area**

WAN ***RAN*** ***MAN*** ***LAN***

Other criteria exist (e.g. provider of commun. facilities , application, ..., etc)

CENTRALIZED COMPUTER NETWORKS

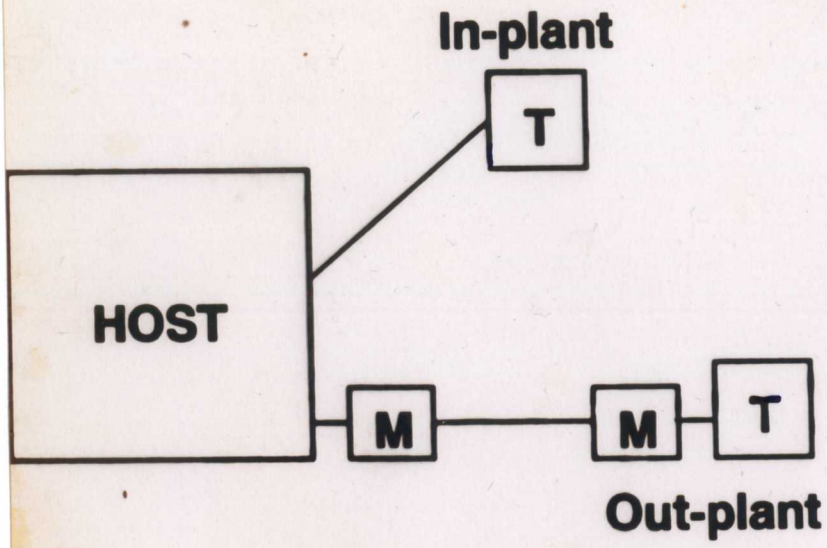

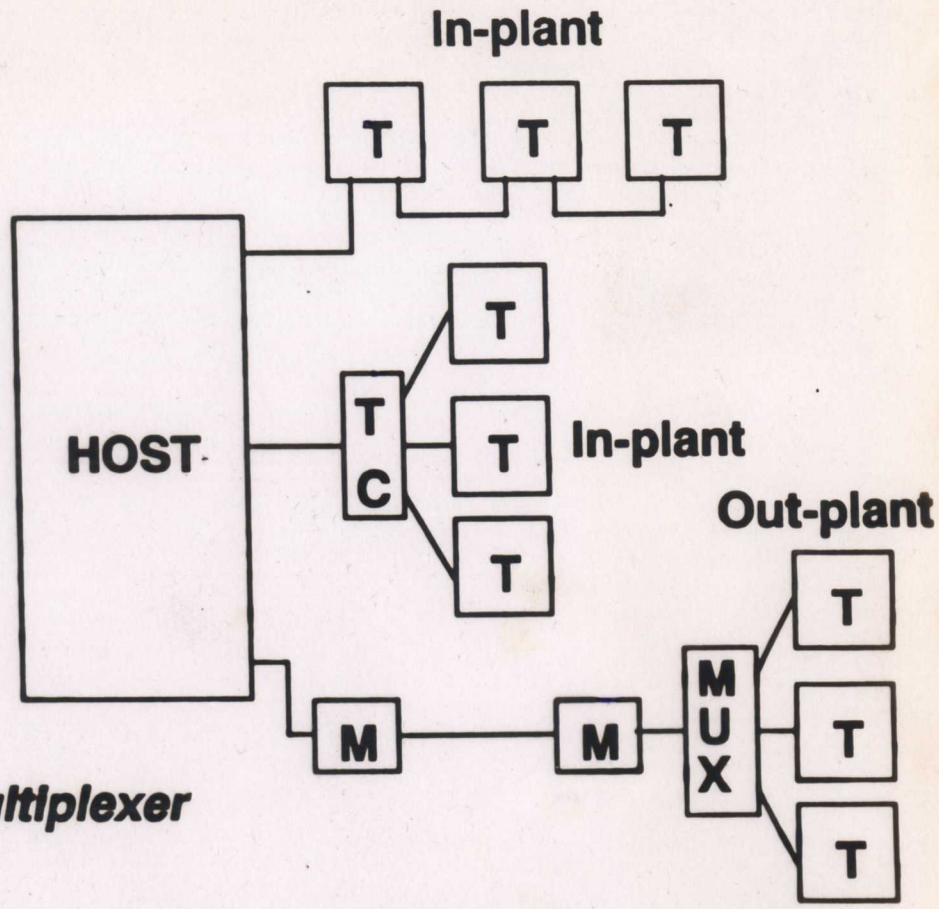

T = terminal *M = modem* *MUX = multiplexer*
TC = terminal controller

One link per terminal

One link for a group of terminals

* Processing power is centralized in one location
* Terminals can only communicate with host
  (1 st wave of computer networks)

DISTRIBUTED COMPUTER NETWORKS

Hierachical

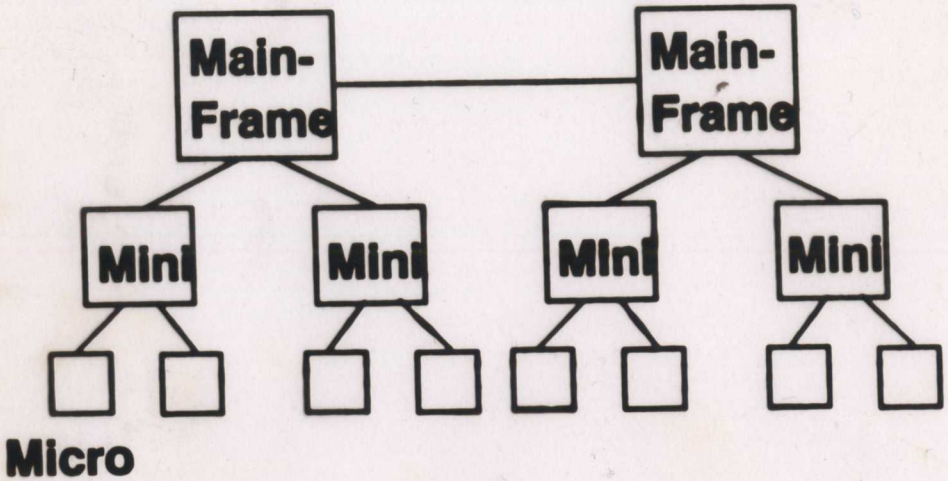

Pier-to-pier

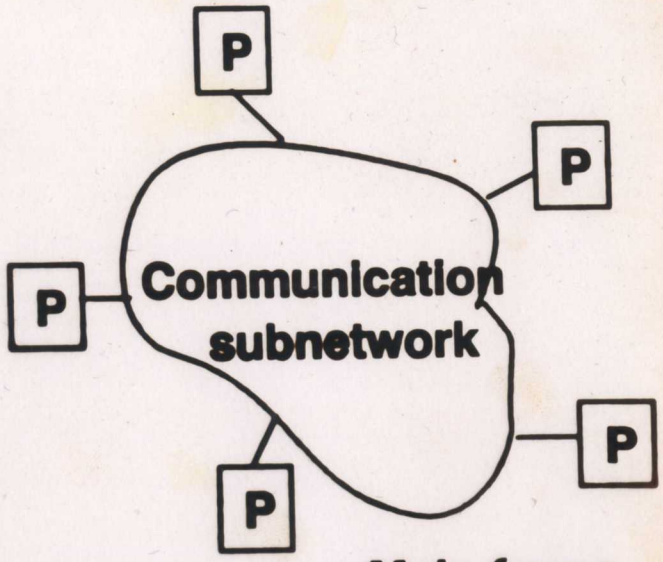

P = processor { *Main frame* / *Mini* / *Micro* }

* Processing power is distributed geographically
* For hierarchical, direct communication is not granted for all processors
  (*2 nd wave of computer networks*)
* For pier-to-pier, direct communication is possible bet. any two processors
  (*current trend in computer networks*)

POINT-TO-POINT NETWORKS

STAR

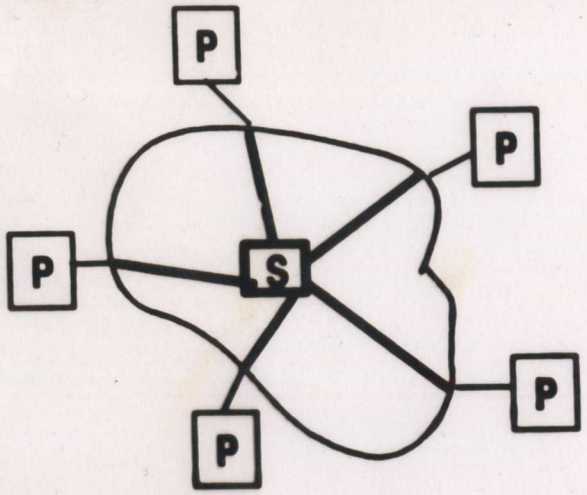

MESH

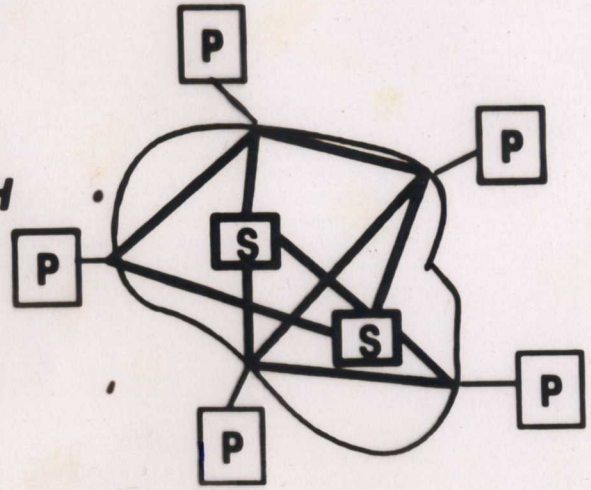

BROADCAST NETWORKS

BUS

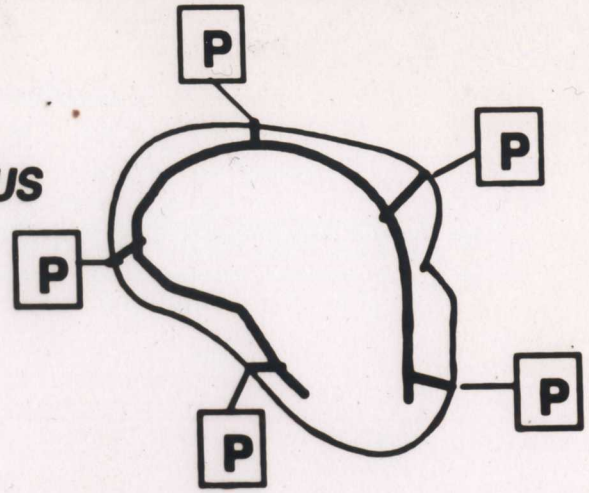

RING

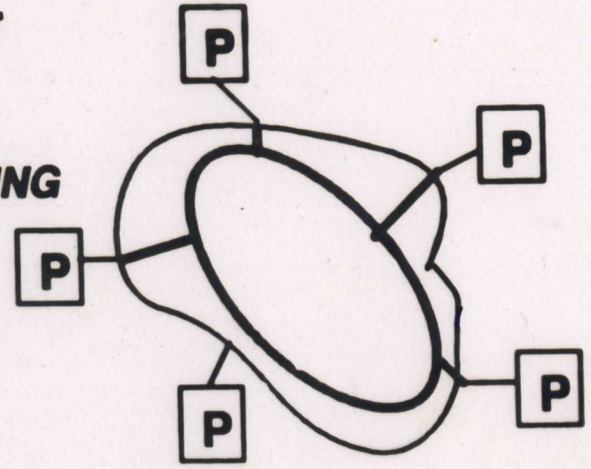

P = Processor
S = Switch

* Point-to-point suitable for long distances
* Star is smipler; mesh more reliable

* Broadcast suitable for short distances
* Bus easier to install; ring more reliable

WIDE AREA NETWORKS (WAN)

* Between continents

* Transmission facilities provided by common carriers. Include : *satellite, coaxial cables, public data networks, and public telephone networks.*
(Data rates typically low)

REGIONAL AREA NETWORKS (RAN)

* Between countries in same region

* Transmission facilities provided by common carriers.
(Data rates typically low)

METROPOLITAN AREA NETWORKS (MAN)

* In large metropolitan cities

* Transmission facilities provided by common carriers.
(Data rates typically large)

LOCAL AREA NETWORKS (LAN)

* Within one building or between grou of neighbouring buildings
(e.g. offices, and university campus

* Transmission facilities provided by user.
(Data rates typically large)

B. DATA COMMUNICATION PRINCIPLES

* Communication System Components

* Communication Modes

  one-to-one *one-to-many* *many-to-one* *many-to-many*

* Information Format

  EBCDIC *ASCII* *others*

* Transmission Modes

  Asynchronous *Synchronous*

* Transmission Media

  two-wire open line *twisted pair* *coaxial cable*
  optical fiber *terrestial/satellite (wireless)*

* Signal Transmission

  definitions *transmission impairments* *modems*

COMMUNICATION SYSTEM COMPONENTS

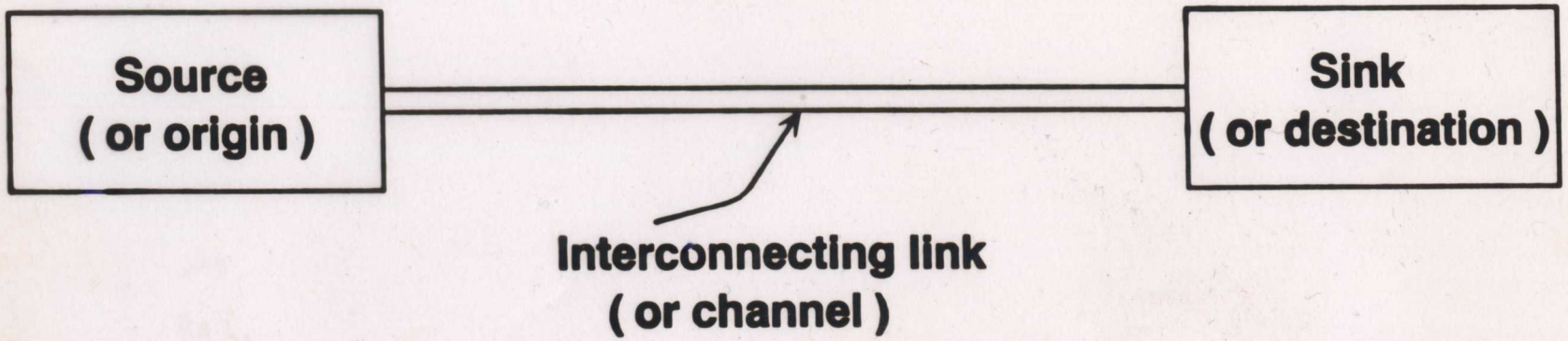

Source (origin) = human - sensor - Data Terminal Equipment (DTE)
computer - VDU - printer

Sink (destination) = human - actuator - Data Terminal Equipment (DTE)

COMMUNICATION MODES

one - to - one

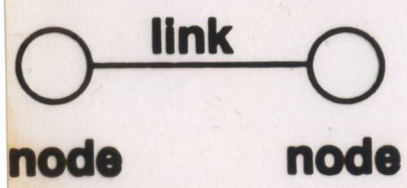

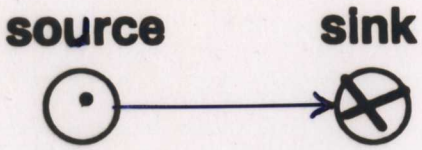

unilateral (or simplex)

e.g. computer to printer

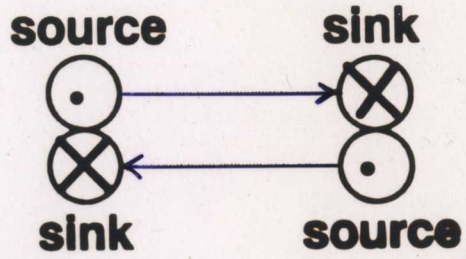

bilateral (or duplex half / full)

e.g. computer to computer

one - to - many

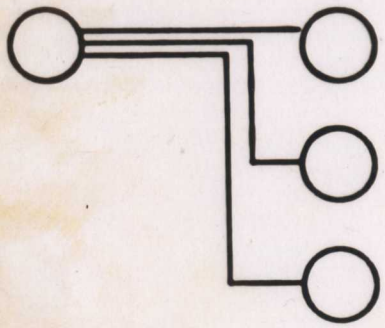

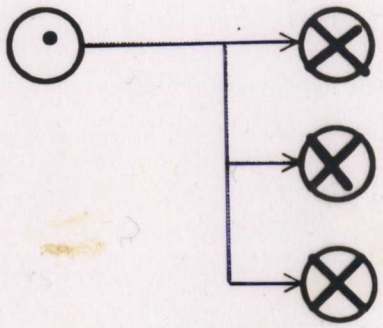

broadcast

e.g. bulletin board of flights in airports

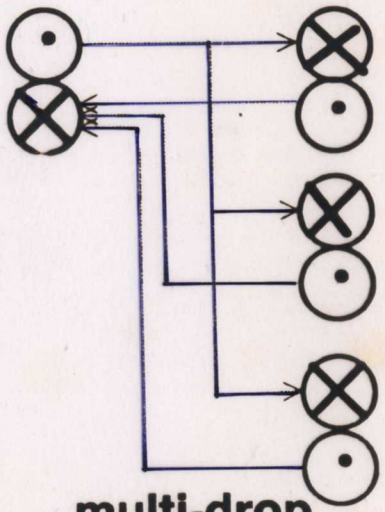

multi-drop

e.g. host-to-terminals

many - to - one

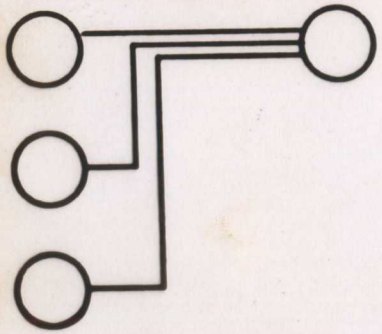

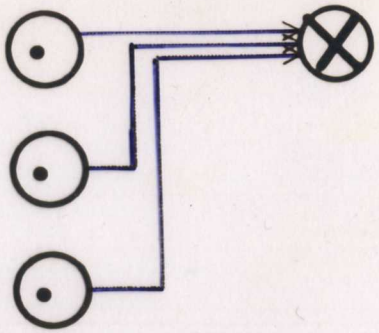

collection

e.g. telemetry

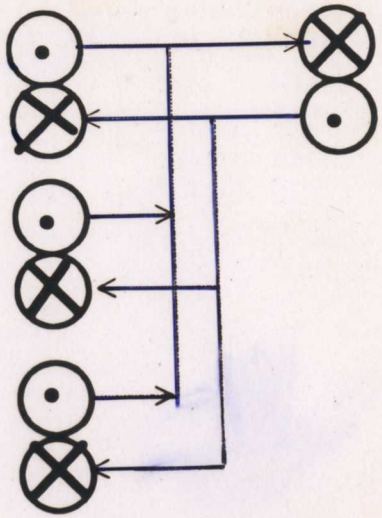

multi-drop

e.g. terminals to host

many - to -many
(network)

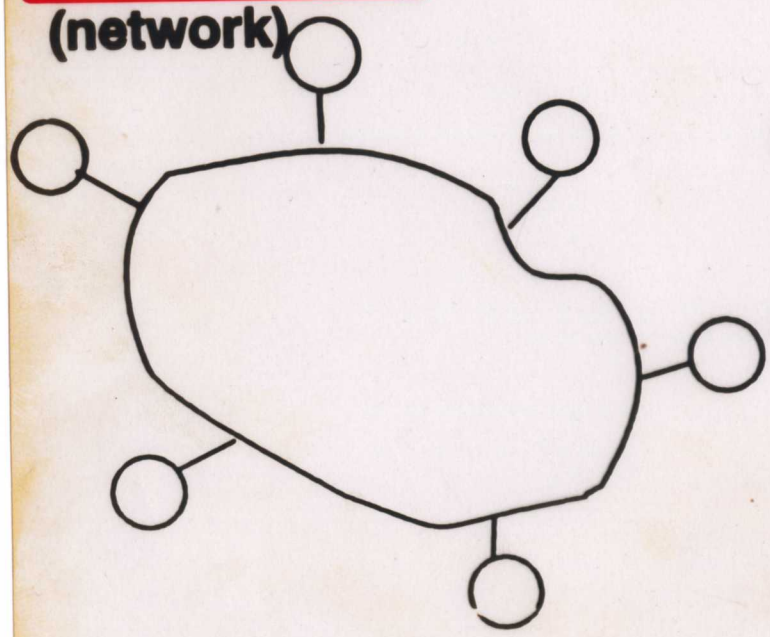

if connection involves two nodes only
simples or duplex (half or full)
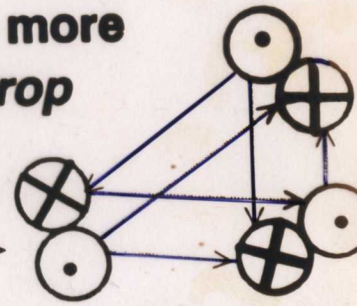
if connection involves three nodes or more
broadcast or collection or multidrop
or conference