ELC 406A
Advanced Digital Communication

Lecture 5

Jamming & Ranging

Dr.Yasmine Fahmy
ELC 406A

Jammer Types

Noise Like Jammer (Barrage Jammer)

Partial Band Jammer

Tone Jammer

Multiple Tone Jammer

Jammer Types

Continous Time Jammer

Pulsed Jammer

Noise Like Jammer

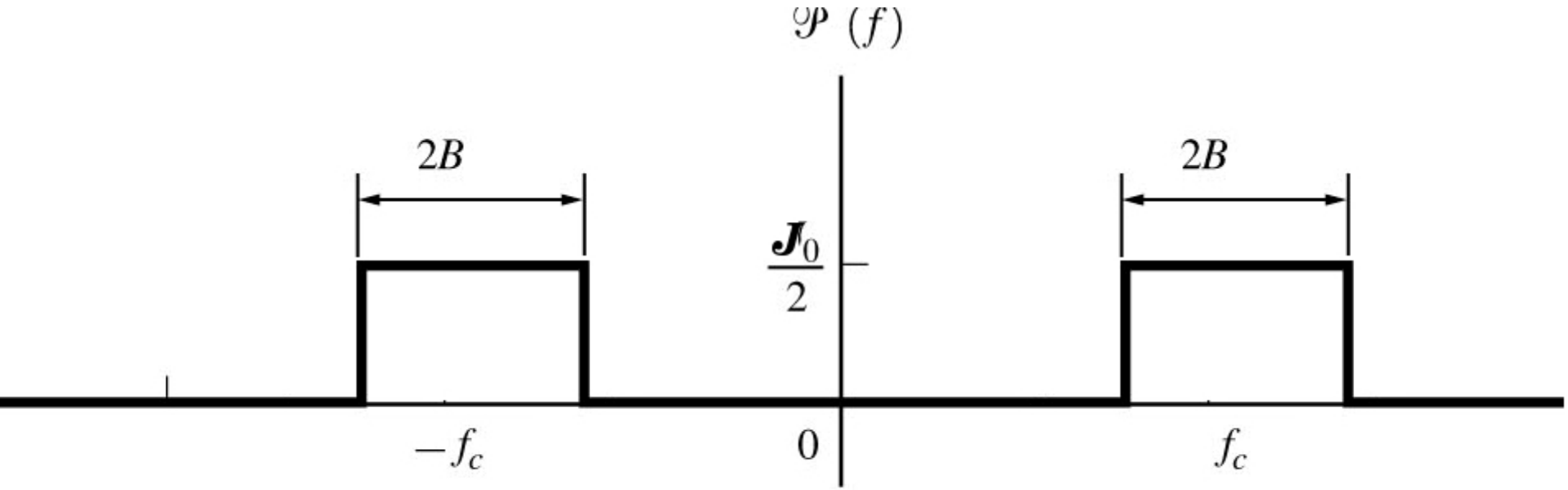

$$\text{Total Jammer Power} = J = \frac{J_o}{2} * 2\,BW = 2 * \frac{J_o}{T_c}$$

Noise Like Jammer

No DSSS:

$$SNR_o = \frac{E_b}{J_o} = 2.\frac{P}{J}$$

With DSSS:

$$SNR_o = \frac{E_b}{J_o} = 2.\frac{P.T_b}{J.T_c}$$

$$PG = \frac{T_b}{T_c}$$

Noise Like Jammer

Noise and Jammer

$$SNR_o = \frac{E_b}{N_o + J_o} = \frac{2.E_b}{2.N_o + J.T_c}$$

Tone Jammer

- Assume the worth case:
  - jammer has same carrier frequency.
- Neglect the noise

Tone Jammer : No DSSS

$$r_i(t) = \pm\sqrt{2P}\cos(\omega_c t) + \sqrt{2J}\cos(\omega_c t + \phi)$$

$$d_i = \pm\sqrt{P} + \sqrt{J}.\cos(\phi)$$

$$SNR_o = 2.\frac{P}{J}$$

Tone Jammer : With DSSS

$$r_i(t) = \pm\sqrt{2P}.c(t)\cos(\omega_c t) + \sqrt{2J}\cos(\omega_c t + ø)$$

$$d_i = \pm\sqrt{P} + \sqrt{J}.\cos(ø).1/N\sum_{i=0}^{N-1} C_i$$

$$SNR_o = 2.\frac{P.T_b}{J.T_c}$$

Tone Jammer

No DSSS:

$$SNR_o = 2.\frac{P}{J}$$

With DSSS:

$$SNR_o = 2.\frac{P.T_b}{J.T_c}$$

$$PG = \frac{T_b}{T_c}$$

Ranging : Simple Example

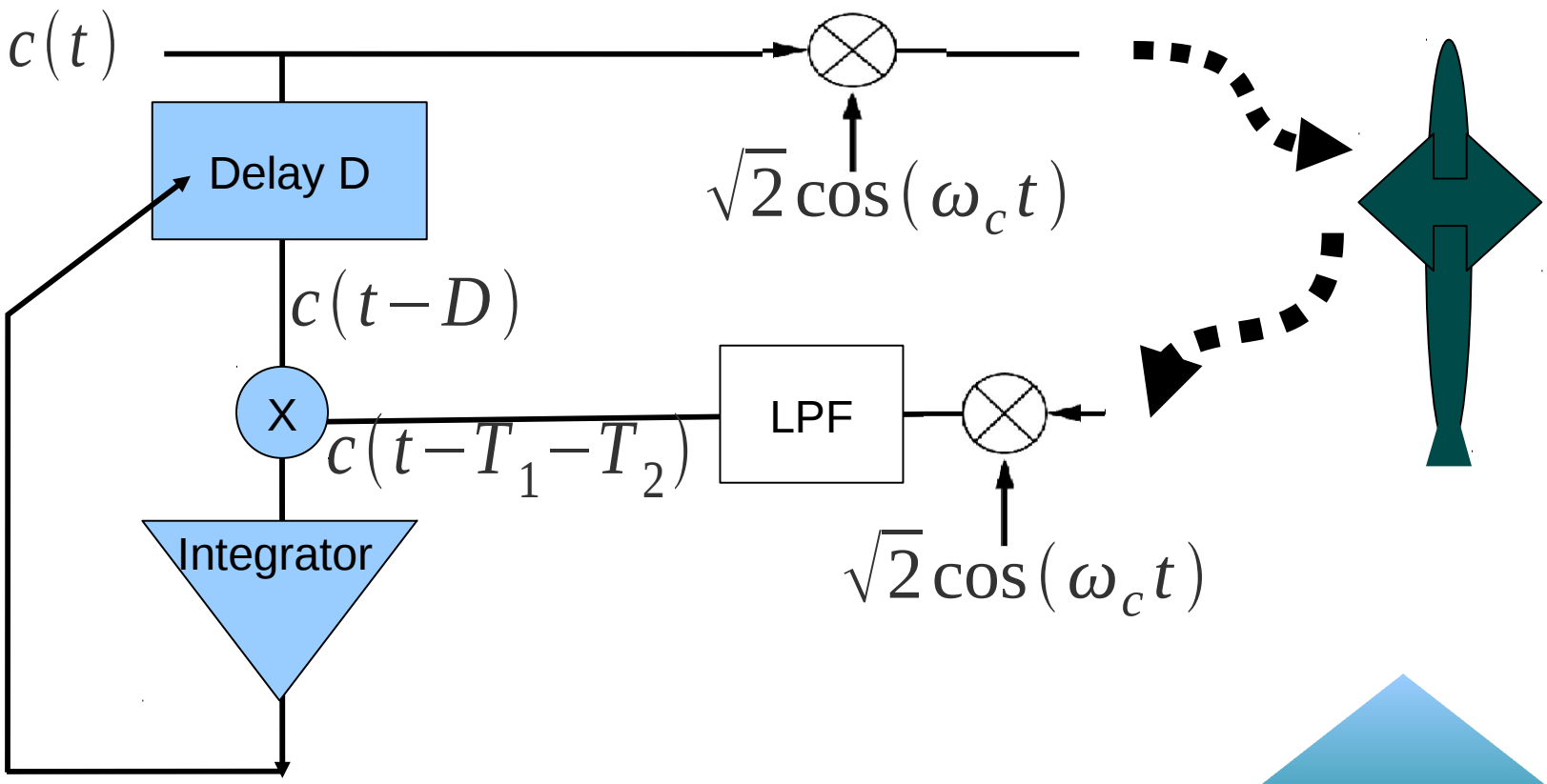

Ranging : Simple Example

- $D = T_1 + T_2 = 2\,T$ (same distance)
- $T = d / c$
- $d = ½\, cD$
- maximum distance = $½\, c.N.T_c$
- Minimum distance = $½\, c.\, T_c$

Questions ???

Thank You