Lecture 1

Overview of Computer Networks

By

Mahmoud T. El-Hadidi

Professor of Computer Networks

Dept. of Electronics and Elec. Communications

Faculty of Engineering – Cairo University

A. TYPES OF COMPUTER NETWORKS

Several criteria :

* **according to location of processing power**

centralized **vs** ***distributed***

hierarchical **pier-to-pier**

* **according to network topology**

point-to-point **vs** ***broadcast***

star **mesh** **bus** **ring**

* **according to geographical area**

WAN ***RAN*** ***MAN*** ***LAN***

Other criteria exist (e.g. provider of commun. facilities , application, ..., etc)

CENTRALIZED COMPUTER NETWORKS

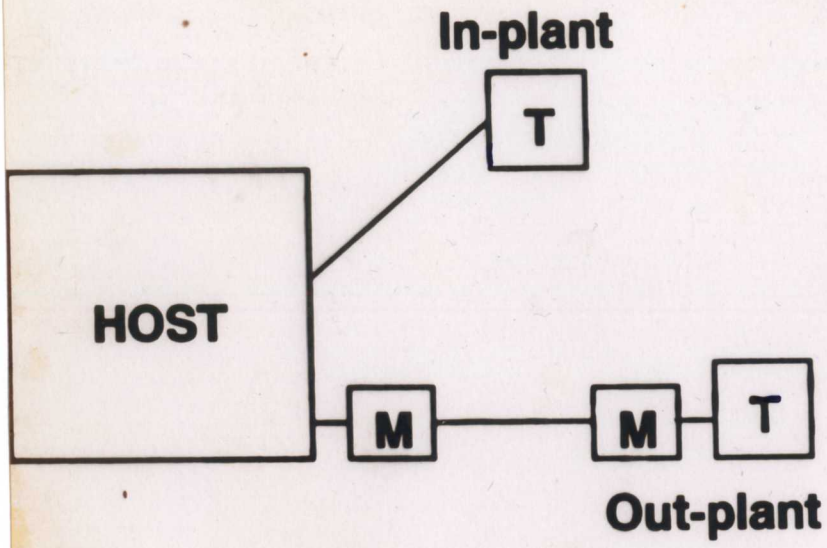

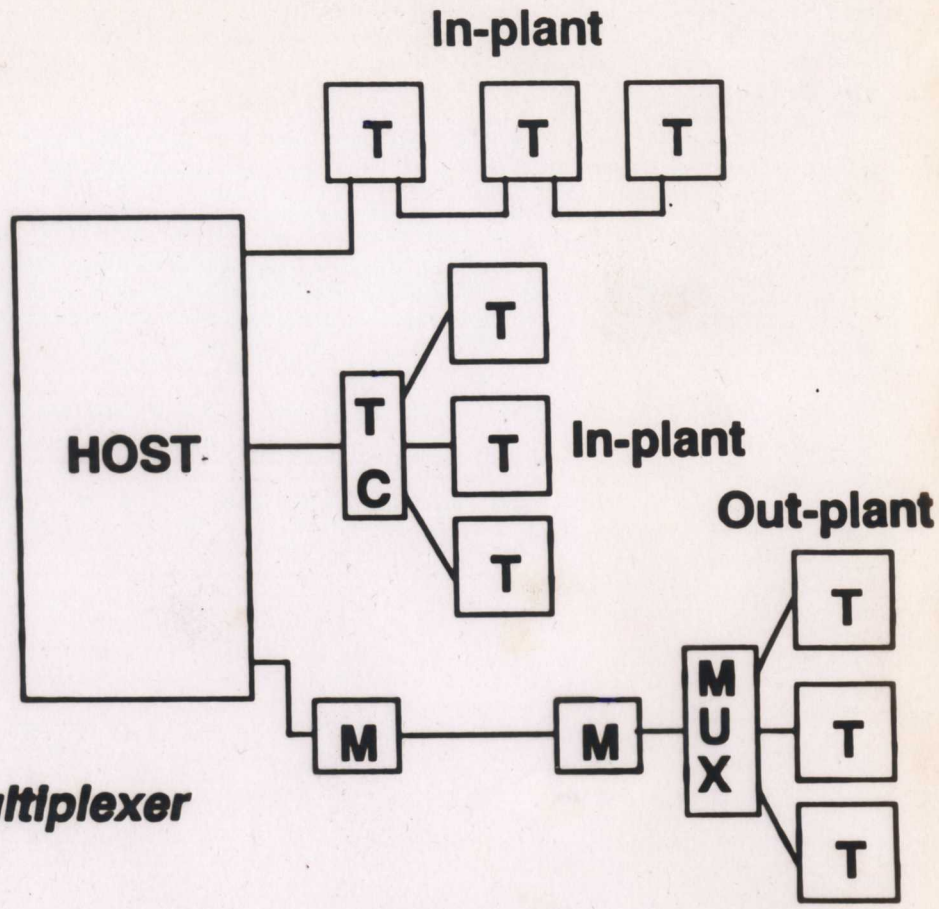

T = terminal *M = modem* *MUX = multiplexer*
TC = terminal controller

One link per terminal

One link for a group of terminals

* Processing power is centralized in one location
* Terminals can only communicate with host
  (1 st wave of computer networks)

DISTRIBUTED COMPUTER NETWORKS

Hierachical

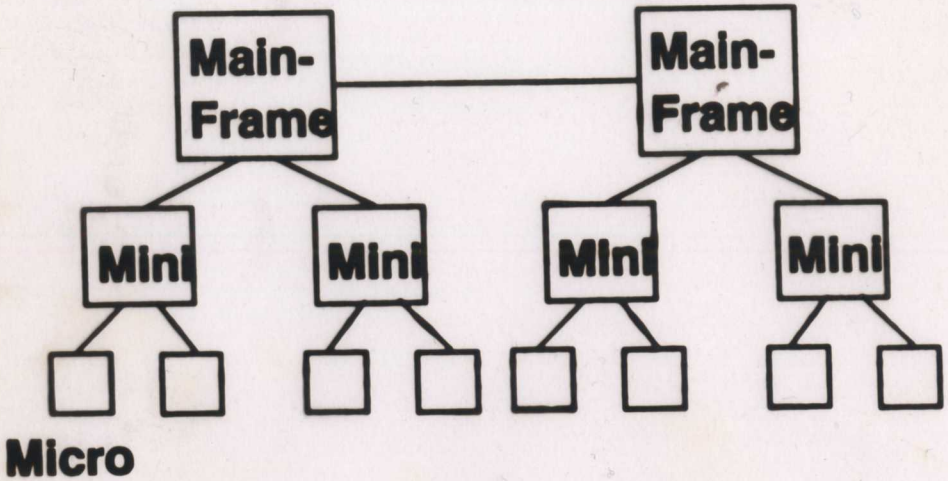

Pier-to-pier

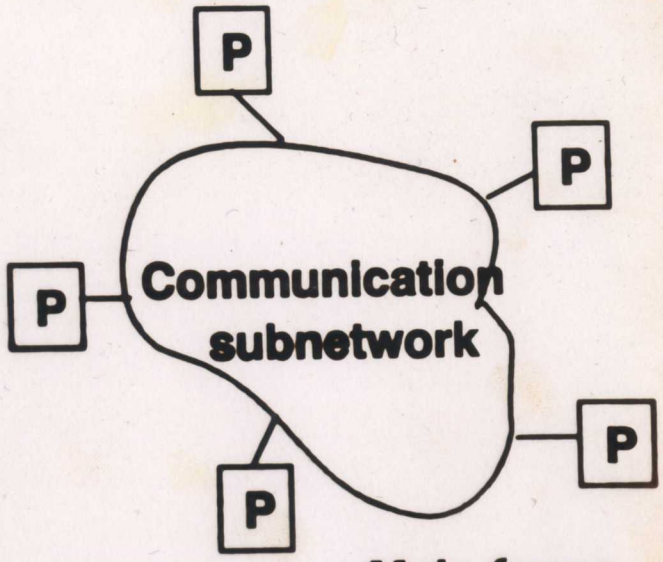

P = processor { *Main frame* / *Mini* / *Micro* }

* Processing power is distributed geographically
* For hierarchical, direct communication is not granted for all processors
  (*2 nd wave of computer networks*)
* For pier-to-pier, direct communication is possible bet. any two processors
  (*current trend in computer networks*)

POINT-TO-POINT NETWORKS

STAR

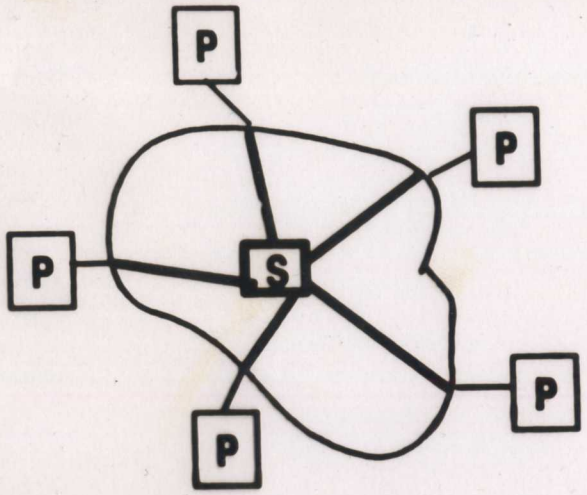

MESH

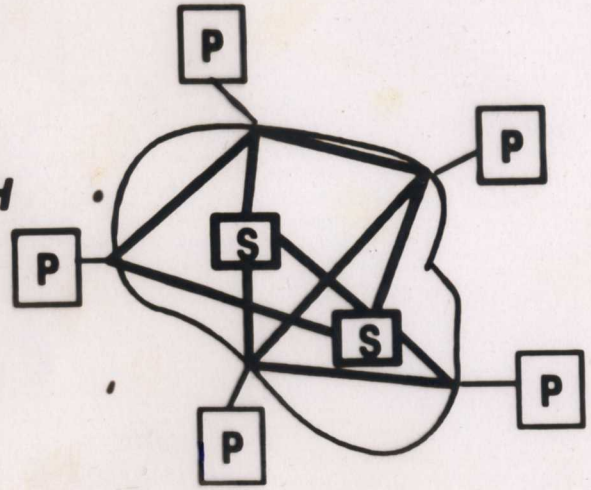

BROADCAST NETWORKS

BUS

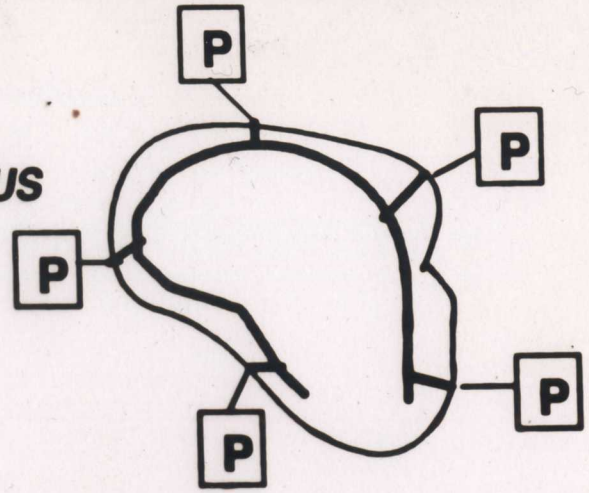

RING

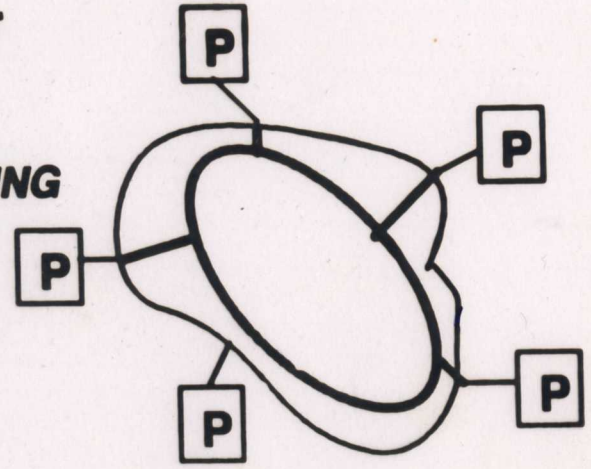

P = Processor
S = Switch

* Point-to-point suitable for long distances
* Star is smipler; mesh more reliable

* Broadcast suitable for short distances
* Bus easier to install; ring more reliable

WIDE AREA NETWORKS (WAN)

* Between continents

* Transmission facilities provided by common carriers. Include : *satellite, coaxial cables, public data networks, and public telephone networks.*
(Data rates typically low)

REGIONAL AREA NETWORKS (RAN)

* Between countries in same region

* Transmission facilities provided by common carriers.
(Data rates typically low)

METROPOLITAN AREA NETWORKS (MAN)

* In large metropolitan cities

* Transmission facilities provided by common carriers.
(Data rates typically large)

LOCAL AREA NETWORKS (LAN)

* Within one building or between grou of neighbouring buildings
(e.g. offices, and university campus

* Transmission facilities provided by user.
(Data rates typically large)

B. DATA COMMUNICATION PRINCIPLES

* Communication System Components

* Communication Modes

  one-to-one *one-to-many* *many-to-one* *many-to-many*

* Information Format

  EBCDIC *ASCII* *others*

* Transmission Modes

  Asynchronous *Synchronous*

* Transmission Media

  two-wire open line *twisted pair* *coaxial cable*
  optical fiber *terrestial/satellite (wireless)*

* Signal Transmission

  definitions *transmission impairments* *modems*

COMMUNICATION SYSTEM COMPONENTS

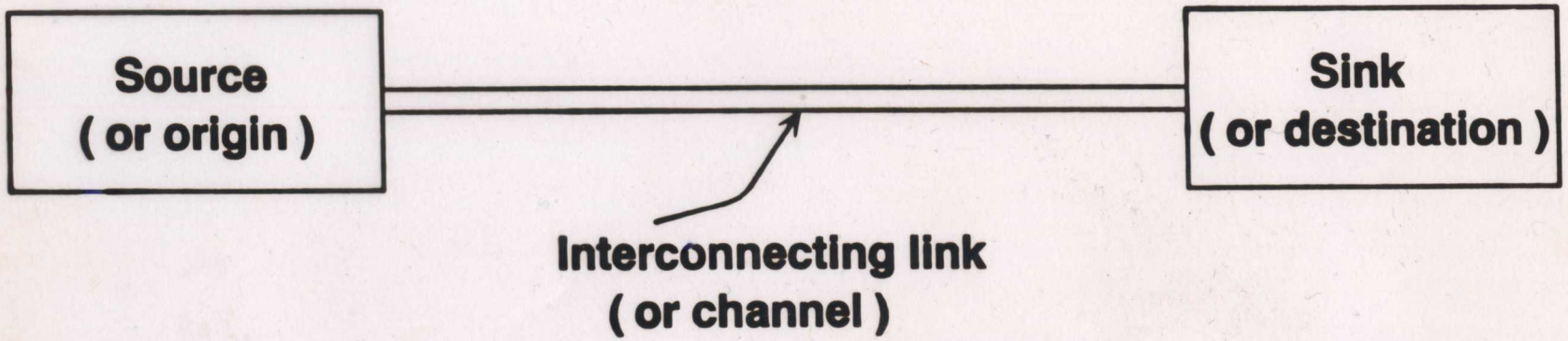

Source (origin) = human - sensor - Data Terminal Equipment (DTE)
computer - VDU - printer

Sink (destination) = human - actuator - Data Terminal Equipment (DTE)

COMMUNICATION MODES

one - to - one

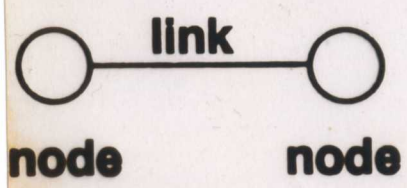

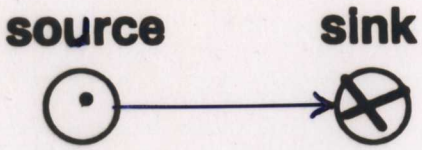

unilateral (or simplex)

e.g. computer to printer

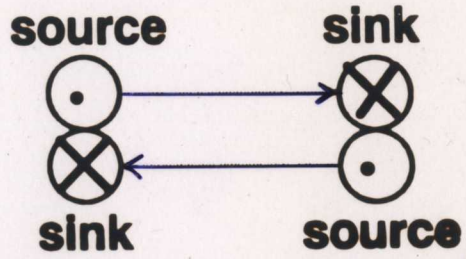

bilateral (or duplex half / full)

e.g. computer to computer

one - to - many

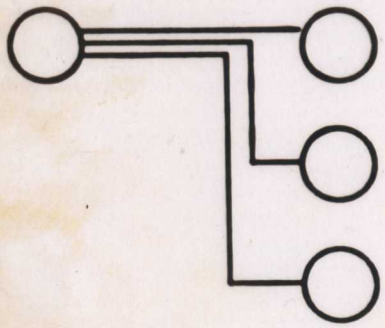

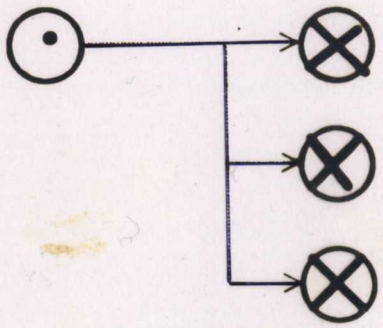

broadcast

e.g. bulletin board of flights in airports

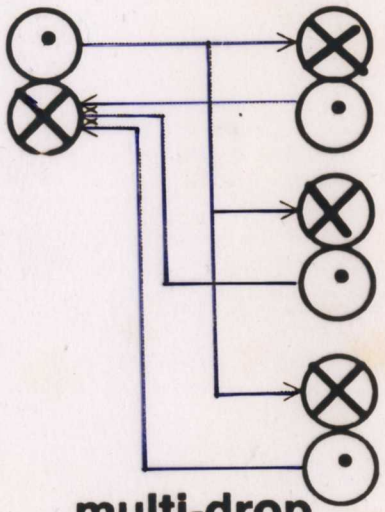

multi-drop

e.g. host-to-terminals

many - to - one

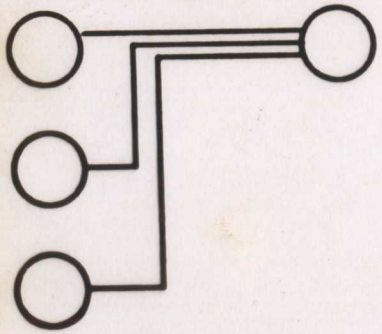

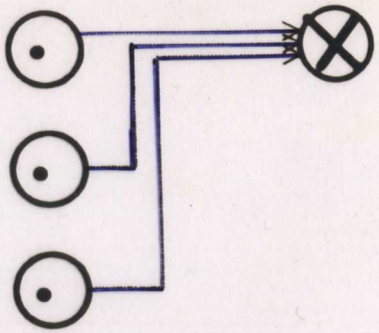

collection

e.g. telemetry

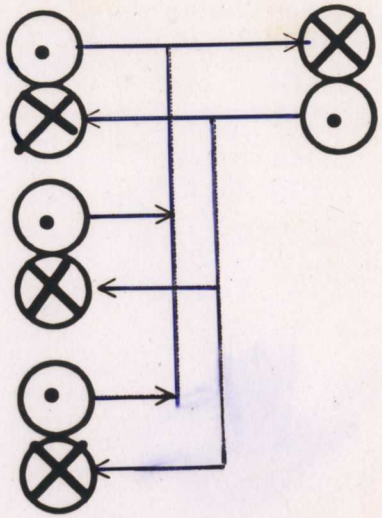

multi-drop

e.g. terminals to host

many - to -many
(network)

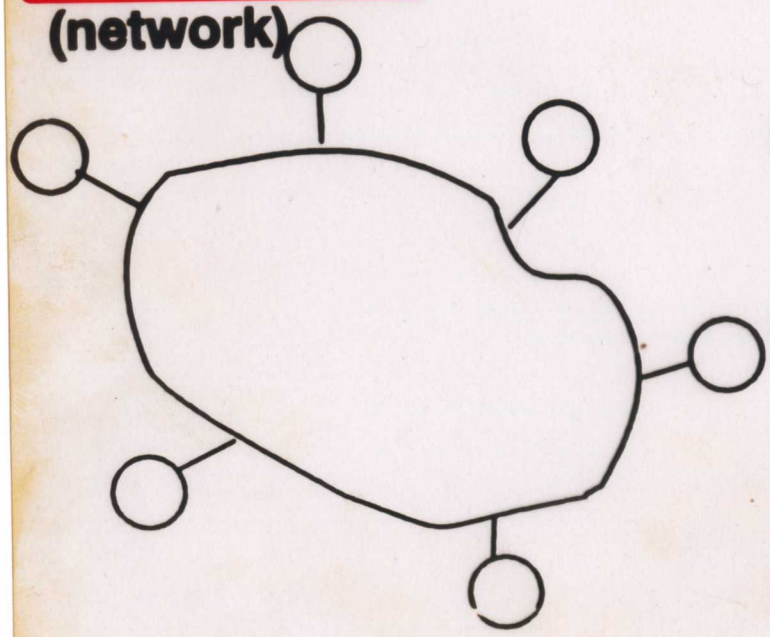

if connection involves two nodes only
simples or duplex (half or full)

if connection involves three nodes or more
broadcast or collection or multidrop
or conference

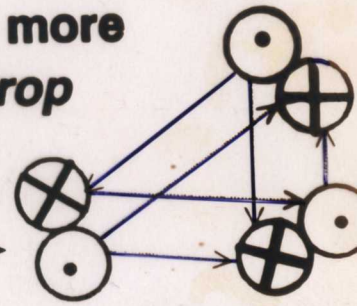

INFORMATION FORMAT

- information refers to either
  data to be transferred
  or control messages needed to achieve their transfer

- electronic digital equipment use fixed number of binary digits (bits) to represent information. E.g.
  8 - bits 16 - bits 32 - bits

- typically, 8 - bits have been used to represent information such as
  characters
  numbers
  control characters *(for display, device control, communication)*

- examples of 8 - bit codes are
  EBCDIC *(Extended Binary Coded Decimal Interchange Code)*
  ASCII *(American Standard Code for Information Interchange)*

- other codes exist. E.g. 5 - bit Baudot code used for telex.

Code Sets: EBCDIC

Bits																			
			4	0	0	0	0	0	0	0	0	1	1	1	1	1	1	1	1
			3	0	0	0	0	1	1	1	1	0	0	0	0	1	1	1	1
			2	0	0	1	1	0	0	1	1	0	0	1	1	0	0	1	1
			1	0	1	0	1	0	1	0	1	0	1	0	1	0	1	0	1
8	7	6	5																
0	0	0	0	NUL	SOH	STX	ETX	PF	HT	LC	DEL			SMM	VT	FF	CR	SO	SI
0	0	0	1	DLE	DC_1	DC_2	DC_3	RES	NL	BS	IL	CAN	EM	CC		IFS	IGS	IRS	IUS
0	0	1	0	DS	SOS	FS		BYP	LF	EOB	PRE			SM			ENQ	ACK	BEL
0	0	1	1			SYN		PN	RS	UC	EOT					DC_4	NAK		SUB
0	1	0	0	SP										¢	.	<	(	+	
0	1	0	1	&										!	$	*	)	.	¬
0	1	1	0	—	/										.	%	-	>	?
0	1	1	1												#	@	.	=	"
1	0	0	0		a	b	c	d	e	f	g	h	i						
1	0	0	1		j	k	l	m	n	o	p	q	r						
1	0	1	0			s	t	u	v	w	x	y	z						
1	0	1	1																
1	1	0	0		A	B	C	D	E	F	G	H	I						
1	1	0	1		J	K	L	M	N	O	P	Q	R						
1	1	1	0			S	T	U	V	W	X	Y	Z						
1	1	1	1	0	1	2	3	4	5	6	7	8	9						

PF - Punch Off
HT - Horizontal Tab
LC - Lower Case
DEL - Delete
SP - Space
UC - Upper Case

RES - Restore
NL - New Line
BS - Backspace
IL - Idle
PN - Punch On
EOT - End of Transmission

BYP - Bypass
LF - Line Feed
EOB - End of Block
PRE - Prefix (ESC)
RS - Reader Stop
SM - Start Message
Others - Same as ASCII

American National Standard Code for Information Interchange

Bits				7	0	0	0	0	1	1	1	1
				6	0	0	1	1	0	0	1	1
4	3	2	1	5	0	1	0	1	0	1	0	1
0	0	0	0		NUL	DLE	SP	0	@	P	`	p
0	0	0	1		SOH	DC1	!	1	A	Q	a	q
0	0	1	0		STX	DC2	"	2	B	R	b	r
0	0	1	1		ETX	DC3	#	3	C	S	c	s
0	1	0	0		EOT	DC4	$	4	D	T	d	t
0	1	0	1		ENQ	NAK	%	5	E	U	e	u
0	1	1	0		ACK	SYN	&	6	F	V	f	v
0	1	1	1		BEL	ETB	'	7	G	W	g	w
1	0	0	0		BS	CAN	(	8	H	X	h	x
1	0	0	1		HT	EM	)	9	I	Y	i	y
1	0	1	0		LF	SUB	*	:	J	Z	j	z
1	0	1	1		VT	ESC	+	;	K	[	k	{
1	1	0	0		FF	FS	,	<	L	\	l	:
1	1	0	1		CR	GS	–	=	M	]	m	}
1	1	1	0		SO	RS	.	>	N	^	n	~
1	1	1	1		SI	US	/	?	O	—	o	DEL

Example:

Bits: P*7 6 5 4 3 2 1

1 1 0 0 0 0 0 1 = letter "A" (Odd Parity)
0 0 1 1 1 0 0 0 = number "8" (Odd Parity)

P* = Parity Bit

Morse Code

A	• –	N	– •	1	• – – – –
B	– • • •	O	– – –	2	• • – – –
C	– • – •	P	• – – •	3	• • • – –
D	– • •	Q	– – • –	4	• • • • –
E	•	R	• – •	5	• • • • •
F	• • – •	S	• • •	6	– • • • •
G	– – •	T	–	7	– – • • •
H	• • • •	U	• • –	8	– – – • •
I	• •	V	• • • –	9	– – – – •
J	• – – –	W	• – –	0	– – – – –
K	– • –	X	– • • –	.	• – • – • –
L	• – • •	Y	– • – –	,	– – • • – –
M	– –	Z	– – • •	?	• • – – • •

Baudot Code

Character Case Lower	Character Case Upper	Bit Pattern 5 4 3 2 1	Character Case Lower	Character Case Upper	Bit Pattern 5 4 3 2 1
A	–	0 0 0 1 1	Q	1	1 0 1 1 1
B	?	1 1 0 0 1	R	4	0 1 0 1 0
C	:	0 1 1 1 0	S	'	0 0 1 0 1
D	$	0 1 0 0 1	T	5	1 0 0 0 0
E	3	0 0 0 0 1	U	7	0 0 1 1 1
F	!	0 1 1 0 1	V	;	1 1 1 1 0
G	&	1 1 0 1 0	W	2	1 0 0 1 1
H	#	1 0 1 0 0	X	/	1 1 1 0 1
I	8	0 0 1 1 0	Y	6	1 0 1 0 1
J	Bell	^ 1 0 1 1	Z	"	1 0 0 0 1
K	(	0 1 1 1 1	Letters (Shift)↓		1 1 1 1 1
L	)	1 0 0 1 0	Figures (Shift)↑		1 1 0 1 1
M	.	1 1 1 0 0	Space (SP) =		0 0 1 0 0
N	,	0 1 1 0 0	Carriage Return <		0 1 0 0 0
O	9	1 1 0 0 0	Line Feed ≡		0 0 0 1 0
P	0	1 0 1 1 0	Blank		0 0 0 0 0

1 = Mark = Punch Hole
0 = Space = No Punch Hole