Cairo University
Faculty of Engineering
Electronics and Communications Department

Fouth Year
ELC403A : Computers 4A
"Computer Networks"
2012-2013

Sheet 2

Problem 1 *(Hub, Switch, and Router)*

Compare between repeaters, switches and routers from the point of view of: Cost, Processing Capabilities, Routing Rules, Range of Coverage and the OSI layers they support.

Problem 2 *(Packets format and routing tables)*

For the figure shown below:

a. If B & C are two switches, and packets are transmitted among stations in the following order:

S ⟶ U
G ⟶ K
A ⟶ S
D ⟶ G

Provide the following details of each packet type

- Packet format
- Port of switch B that forward information, entries of switch B after packet forwarding
- Port of switch C that forward information, entries of switch C after packet forwarding

b. If B & C are two routers and packets are transmitted in the same order as in above. Provide the following details of each packet type

- Packet format at input of router B; Packet format at output of router B
- Packet format at input of router C; Packet format at output of router C

Hence; suggest the required entries for the routing table of B & C

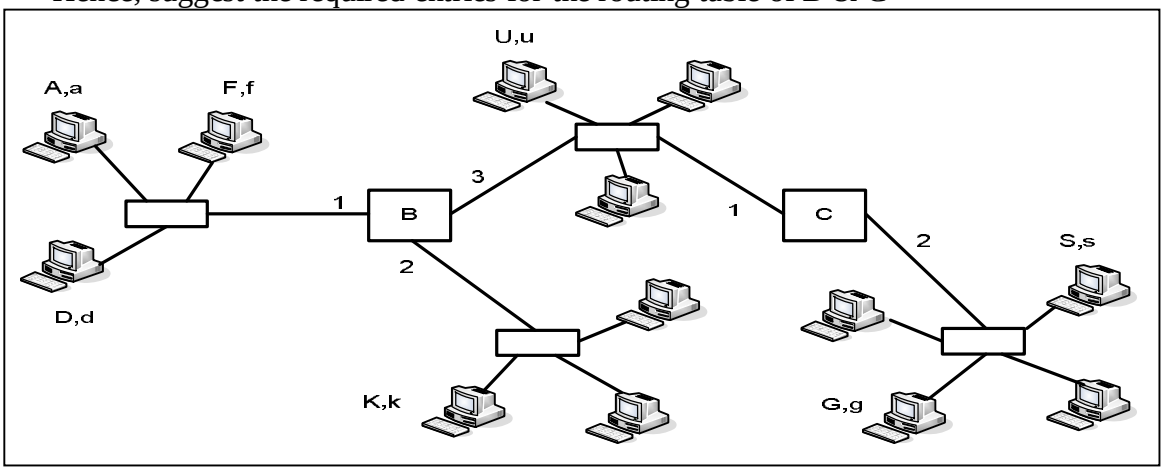

Prof. Dr. Mahmoud EL-HADIDI
Eng. Rania OSAMA & Eng. Marwa MAMDOUH

Problem 3: *(Comparing Different Switching Techniques - 1)*

For the shown topology, assume that distances are less than 100 meters long.

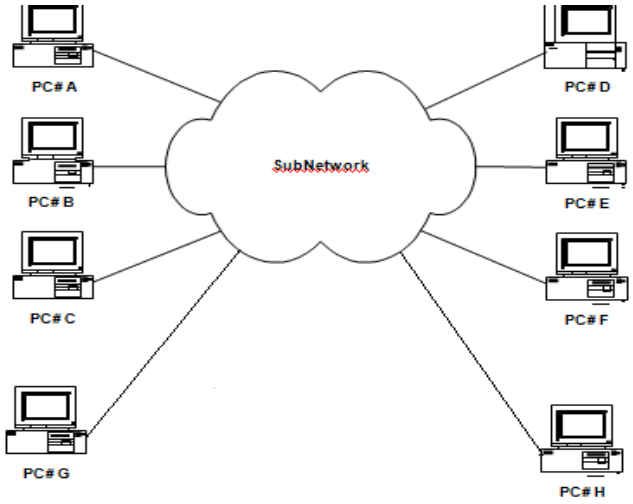

It is required to exchange messages between the eight PC's A, B, C, D, E, F, G, and H. For that purpose, the following FOUR scenarios were proposed:

Scenario 1

Each PC is connected via al link to a box that performs circuit-switching.

Scenario 2

Each PC is connected via al link to a box that performs packet-switching at layer 1 (Physical Layer).

Scenario 3

Each PC is connected via al link to a box that performs packet-switching at layer 2 (Data Link Layer).

Scenario 4

Each PC is connected via al link to a box that performs packet-switching at layer 3 (Network Layer).

For each of the FOUR scenarios:

a) Draw a detailed network diagram showing ALL components (hardware and software) needed to allow meaningful communication between (A and D), (B and E), (C and F) , and (G and H).

b) Draw the format of the message (or its components) as it travels between one source and the corresponding destination.

c) Explain the mechanism by which a message in a source PC is delivered to the appropriate destination PC.

d) State the factors that determine the delay between the time a message is ready to send at the source, and the time it is completely delivered to the destination. Hence, write a mathematical expression for the delay.

e) Determine the link speeds of the PC's and the switching speed of the switching box, if the message is produced in the form of bursts, with the following characteristics: average burst duration = 40 ms , average burst size = 1280 bits , and average interval between bursts = 60 ms

f) Compute the maximum throughput through the switch for the values given in e) above. Under what conditions is the maximum throughput realized?

Problem 4: *(Comparing Different Switching Techniques - 2)*

The figure shown below depicts three different network implementations for connecting 4 stations (A, B, C, D):

Suppose station A wants to send a message of size 1 MB to station C, and station B wants to send a message of size 2 MB to station D.

a) Explain the steps applied by the FOUR networks in order to deliver the two messages described above.
b) Give a typical frame format for the data units transmitted – for each of the two messages – in the case of the FOUR networks.
c) Which of the FOUR networks require the use of ARP ? Justify your answer.
e) Estimate the time needed to deliver the two messages for each of the FOUR networks.

(Make any reasonable assumptions).

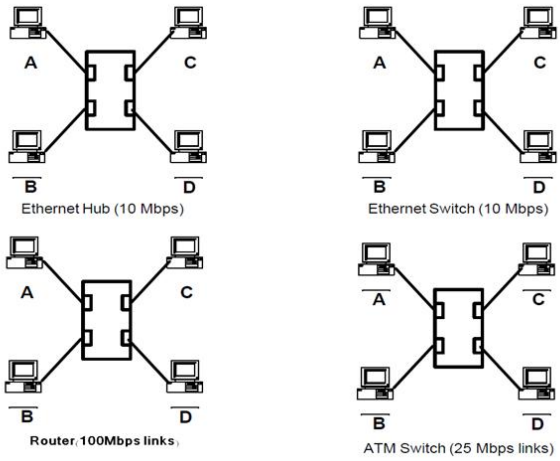

Problem 5: *(Comparing Different Network Devices)*

For the shown network configuration:

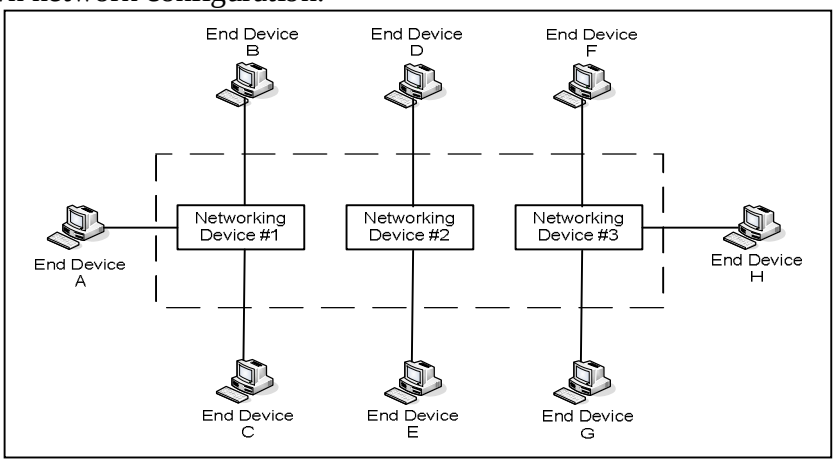

a) If the three networking devices are Ethernet hubs:
   i. W h a t is the maximum allowable distance between any two end devices?
   ii. What is the maximum throughput through the entire network (consisting of the three hubs), if each end device is connected via a 10 Mbps link?
b) If the three networking devices are Ethernet switches:
   i. W h a t is the maximum allowable distance between any two end devices?

ii. What is the maximum throughput through the entire network (consisting of the three switches), if each end device is connected via a 10 Mbps link (half-duplex)?

iii. Repeat part (b) ii. if each end device is connected via a 10 Mbps link (full-duplex).

iv. Repeat part (b) ii. if end devices B and D are connected via a 100 Mbps links (full- duplex), but all other end devices are connected via 10 Mbps links (full-duplex).

c) Suppose that a router is placed between the two hubs. How would this affect the computed throughput comparing with part (a)? Justify your answer.

Problem 6 (Typical LAN/WAN Design – 1):

For the layout shown below:

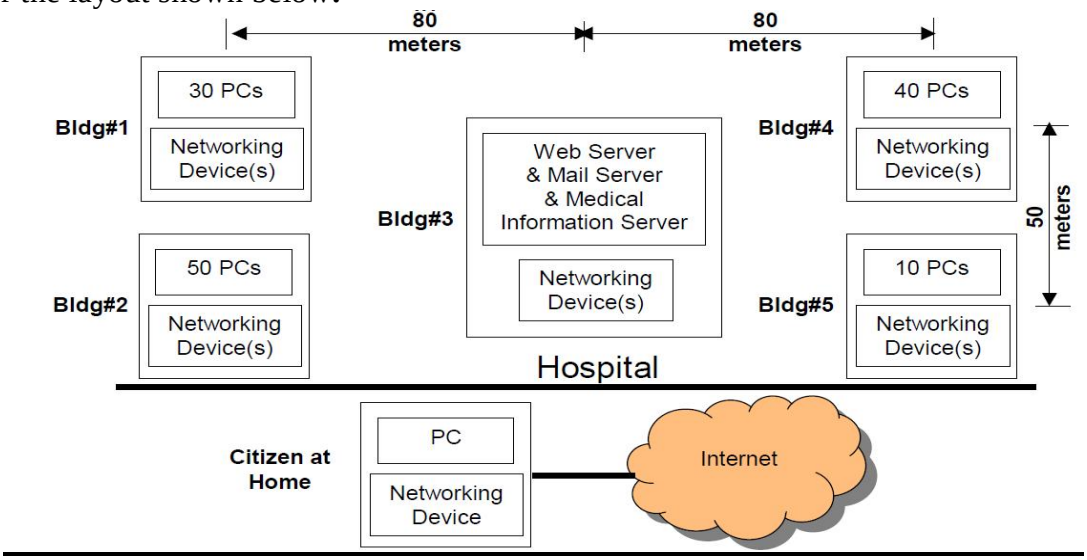

Design an information network which achieves the following requirements:

i. Each PC can communicate with any other PC.

ii. Each PC can communicate with the Web Server, the Mail Server, and the Medical Information Server.

iii. Each PC can connect to the Internet.

iv. PC of Citizen at Home can connect to the Web Server, the Mail Server, and the Medical Information Server.

a) Draw a schematic diagram for a computer network that achieves the requirements (i. – iv.) above. Your drawing should indicate the type of networking devices used (hub, switch, or router). You should also specify the type of links used between the various buildings and suggest suitable link speeds.

Hint:

For hubs & switches: # of LAN Ports = 24

For routers: # of LAN ports = 1 or 2, # of WAN Ports 1 or 2

b) Show the content of routing tables in the networking devices you selected that correspond to the following transmission of packets:

· Computer (C11) in Bldg 1 to computer (C13) in bldg 3

· Citzen at home to computer (C25) in bldg 5

Problem 7: *(Typical LAN/WAN Design - 2)*

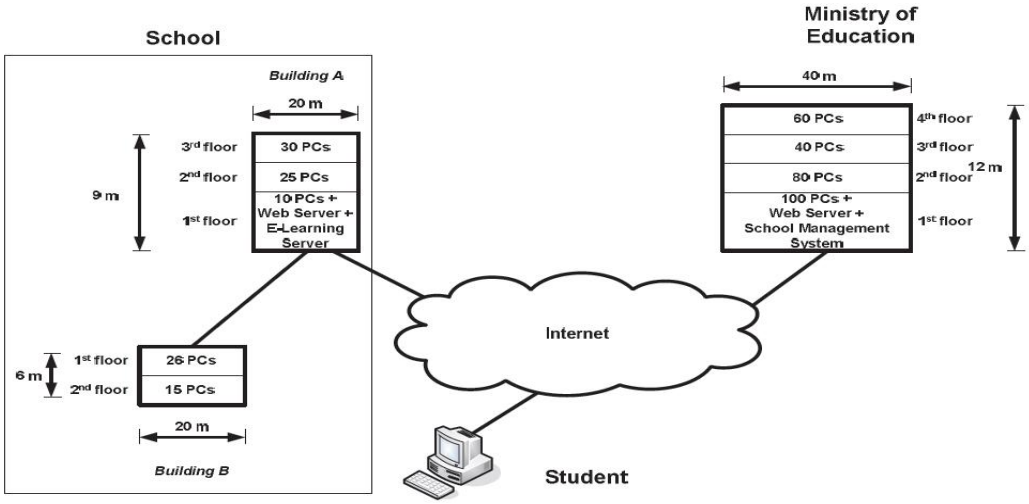

The above figure shows proposed setup for the information network that connects a "School" to the "Ministry" of Education and the Internet.
Redraw the diagram after adding switches and routers needed to enable physical connection for the PCs and servers, as well as physical connectivity to the outside world.
Remark: Assume that a hub or a switch can have up to 24 ports in one device, while a router can have multiple ports.

Problem 8:*(ATM Networks Operation)*

For the ATM network shown below:

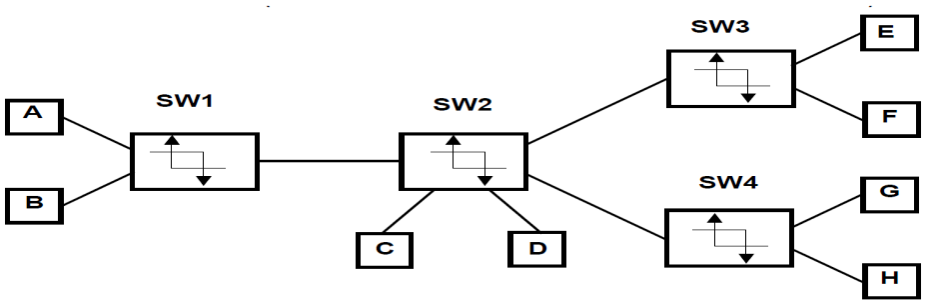

Connections between stations are setup in the following order:

A ---> C and H, F --> B and G, G --> B and E

a) Draw the routing tables for switches SW1, SW2, SW3, and SW4 showing the entries corresponding to the three connections described above.
b) Draw the block diagram for a typical ATM switch showing its internal structure.
c) Suppose the link between switches SW1 and SW2 has capacity 25 Mbps, and the output buffer size at switch SW1 is 2MB. Determine the parameters of the Leaky-Bucket to be used in SW1 if the stations produce traffic of average bit rate 3 Mbps.
d) What is the maximum delay experienced by a cell in switch SW1?